CITY OF WHITE HOUSE
Board of Mayor and Aldermen Agenda
October 16, 2008
7:00 p.m.

1. Call to Order by the Mayor

2. Prayer/Pledge

3. Roll Call

4. Adoption of the Agenda

5. Approval of Minutes of August 21, 2008 Meeting

6. Welcome Visitors

7. Communications from Mayor, Aldermen and City Administrator
   a. Mayor recognizes Wastewater Treatment and Inspection Staff

8. Acknowledge Reports
   A. General Government
   B. Police
   C. Fire
   D. Public Works
   E. Wastewater
   F. Planning and Codes
   G. Parks
   H. Library
   I. Engineering
   J. Court Clerk
   K. Monthly Financial Summary

9. New Business

   A. Consideration of the following resolutions:

      1. **Resolution 08-15** – A resolution of the Board of Mayor and Aldermen supporting the application for a Transportation Enhancement Grant for the revitalization of the Town Center of White House.

      2. **Resolution 08-16** – A resolution of the Board of Mayor and Aldermen adopting an Identity Theft Policy.

      3. **Resolution 08-17** – A resolution of the Board of Mayor and Aldermen authorizing the sale and providing the details of not-to-exceed $6,150,00 General Obligation Refunding Bonds, Series 2008, of the City of White House, Tennessee and providing for the levy of ad valorem taxes in connection therewith.

C. Finance

1. Board approval of the City Administrator's merit increase and cost of living increase per employee agreement.

2. Board approval of the City Administrator's contract extension.

4. Board approval of a bid by Allied Waste Services for roll-off container service at the Public Works Facility.

5. Board approval of a bid by Rexel Southern Dot. for decorative street light posts and fixtures.

5. Board approval of a request by the Police Department to purchase a records management system from M & M Microsystems for $17,070.

D. Other Business

1. Board approval of street acceptance for White House Crossings and Wilkinson Lane improvements.

2. Board approval of a Take-Home Vehicle Request for the Wastewater Department.

10. Adjournment

CITY OF WHITE HOUSE
MINUTES
Board of Mayor and Aldermen Agenda
September 18, 2008
7:00 p.m.

1. **Call to Order by the Mayor**
   Mayor Decker called the meeting to order at 7:00 pm.

2. **Prayer/Pledge**
   Prayer and Pledge to the American Flag by Alderman Bibb.

3. **Roll Call**
   Ald. Arnold – Present; Ald. Bibb – Present; Ald. Bracey – Present; Ald. Leftwich – Present, Mayor Decker – Present. **Quorum Present.**

4. **Adoption of the Agenda**
   Motion was made by Ald. Arnold second by Ald. Bibb to adopt the agenda. **Agenda adopted**.

5. **Approval of Minutes of July 17, 2008 Meeting**
   Motion was made by Ald. Leftwich, second by Ald. Bibb, to approve the minutes as written. **Minutes approved.**

6. **Welcome Visitors**

7. **Public Hearings**

A. **Ordinance 08-19** – An ordinance to amend White House Municipal Code Title 12, Chapters 1-12, Building, Utility, Etc Codes: adopting the latest edition of the International Building Codes. **Second Reading**. **No one spoke for or against.**

B. **Ordinance 08-20** – An ordinance amending Article V of the Zoning Ordinance for the addition of the C-6 Town Center Zoning District. **Second Reading**. **No one spoke for or against.**

C. **Ordinance 08-21** – An ordinance amending the fiscal budget for the period ending June 30, 2008. **Second Reading**. **No one spoke for or against.**

8. Communications from Mayor, Aldermen and City Administrator
   - Ms. Carrier reminded the Board of the Employee Picnic on October 5, 2008 at the City Park from 1:00-4:00 pm. She also reminded the Board that she will be attending the ICMA conference in Richmond, VA, September 21st – 24th.
   - The Mayor stated that, "When excellence is written in your mission statement, you are judged differently than others. Ms. Carrier went on to explain that she will be working with ICMA to measure efficiency and effectiveness by conducting a citizens' survey. She stated that she is planning to conduct one every other year to improve processes, procedures, etc.

9. Acknowledge Reports

A. General Government	E. Wastewater	I. Engineering
B. Police	F. Planning and Codes	J. Court Clerk
C. Fire	G. Parks	K. Monthly Financial Summary
D. Public Works	H. Library	

Motion was made by Ald. Bibb, second by Ald. Arnold, to acknowledge reports and order them filed. A voice vote was called for with all members voting aye.

10. New Business

A. Consideration of the following ordinances:

1. **Ordinance 08-19** – An ordinance to amend White House Municipal Code Title 12, Chapters 1-12, Building, Utility, Etc Codes: adopting the latest edition of the International Building Codes. **Second Reading**. Motion was made by Ald. Leftwich, second by Ald. Bibb to approve. A voice vote was called for with all members voting aye. **Ordinance 08-19 was approved on second and final reading**.

2. **Ordinance 08-20** – An ordinance amending Article V of the Zoning Ordinance for the addition of the C-6 Town Center Zoning District. **Second Reading**. Motion was made by Ald. Bracey, second by Ald. Arnold to approve. A voice vote was called for with all members voting aye. **Ordinance 08-20 was approved on second and final reading**.

5. **Ordinance 08-21** – An ordinance amending the fiscal budget for the period ending June 30, 2008. **Second Reading**. Motion was made by Ald. Leftwich, second by Ald. Arnold to approve. A voice vote was called for with all members voting aye. **Ordinance 08-21 was approved on second and final reading**.

C. Finance

1. Board approval to surplus a 1993 Ford F-150 from the Parks and Recreation department with VIN1FTDF15Y5PNA08662 for sale on GovDeals.com.
Motion was made by Ald. Bibb, second by Ald. Bracey to approve. A voice vote was called for with all members voting aye. **Surplus of 1993 Ford F-150 from the Parks and Recreation Department was approved.**

2. Board approval to proceed with Task Order 08-01 of the Wastewater Discharge Alternatives Evaluation.
Motion was made by Ald. Bibb, second by Ald. Bracey to approve. A voice vote was called for with all members voting aye. **Task order 08-01 of the Wastewater Discharge Alternatives Evaluation was approved.**

3. Board approval of continuation of the "Contract to Audit Accounts" with Work & Greer, PC.
Motion was made by Ald. Leftwich, second by Ald. Bibb to approve. A voice vote was called for with all members voting aye. **The continuation of the "Contract to Audit Accounts" with Work & Greer was approved**.

4. Board approval of an agreement with Neal-Schaffer, Inc. for the 2008-09 Hwy 76 Sidewalk Project.
   Motion was made by Ald. Leftwich, second by Ald. Bracey to approve. A voice vote was called for with all members voting aye. **Agreement with Neal-Schaffer for the 2008-09 Hwy 76 Sidewalk Project was approved.**

D. Other Business

1. Board approval of street acceptance for Indian Ridge, Phase 10.
   Motion was made by Ald. Arnold, second by Ald. Leftwich to approve.
   A voice vote was called for with all members voting aye. **Street acceptance for Indian Ridge, Phase 10 was approved.**

11. Adjournment
    Motion by to adjourn by Ald. Arnold at 7:31 pm.

_____
John Decker, Mayor

ATTEST:

_____
Christie M. Odenwald, City Recorder

REPORTS . . .

City of White House
General Government Department
Monthly Report of September 2008

Administration

The City Administrator has been participating on the Forward Sumner Marketing and Retail Committee. These committees have met several times this month to create a marketing slogan for Sumner County and the cities involved. Also, the retail committee has been preparing a strategy for the upcoming ICSC Conference to work together in promoting the County as a whole. The committee, which includes all economic development officials and chamber directors from the cities, worked to promote the County as a whole and show regionalism at work in our County.

City staff and the Board of Mayor and Alderman worked diligently this month to assist the citizens in getting their voices heard with the TVA transmission upgrade project. The proposed routes were reviewed and a public hearing was held at City Hall to assist citizens in their comments to TVA. The Mayor and City Administrator met with TVA to review the comments heard at the public hearing. The final route should be revealed by TVA in about 3 weeks.

The Fire Chief and City Administrator met with Bob Swinney, architect for the construction of the new fire hall as well as the contractor to discuss possible approval of change orders on the fire station. The contractor completed the work before a request was submitted. Staff has requested detailed invoices before discussing this further. The project is still under the bid amount that was approved by the Board of Mayor and Alderman.

The Planning Director and the City Administrator participated at the TML Policy Committee Meetings to rank the importance of support for the proposed legislation for the upcoming session. The results of this policy committee are located in other information in the agenda packet.

The City Administrator attended several meetings throughout the month including the Joint Economic and Community Development Board Meeting in Sumner County, the Three Star Recognition Ceremony at the Opryland Hotel for Robertson and Sumner Counties, the Robertson County MPO Public Hearing for the Tri-County Land Use Study, and the Robertson County Growth Coordinating Committee. The City Administrator also met with the Library Focus Group to discuss plans for the fundraising campaign to build the new library. White House Utility District met with the City Administrator, the Wastewater Director and the Planning Director to improve the planning commission approval process with streamlining the application process with the City and the Utility district.

The City Administrator attended the International City/County Managers Conference in Richmond, Virginia. There were several networking and educational affairs that were attended. The host committee held a Welcoming Reception with the theme of " A Taste of Virginia." A keynote speaker named Frans Johansson discussed the concept of his book "The Medici Effect" which explored and "intersection" of where ideas from different fields and

cultures meet and collide. A class that was very interesting was that named "Public versus Private: How Do You Do Both?" which welcomed a warm discussion of balancing your personal life with your professional life when it seems that the spotlight is always on. Some other classes included "Maintaining a Sense of Place: Keeping the "Small Town" Feeling" and "Buried Assets and Buries Liabilities: Dealing with Aging Hidden Infrastructure." The Tennessee City Managers Association met in Virginia and has a state association dinner. There was also an SEI Reunion breakfast meeting which was wonderful to see those that graduated in the 2003 class.

The City Recorder attended the Tennessee Association of Municipal Clerks and Recorders Conference in Franklin, TN. Some of the classes included: "Conflicts in Beliefs and Behaviors", "Open Meetings and the Sunshine Law", "Drafting Legislation", "Legal Guides to the City Recorder at Work", "Anticipating and Managing Budget Shortfalls", "FMLA Changes Affecting Your City", "Conducting Council and Committee Meetings", "Financing Local Governments", and "Principles of Communication: Do You Hear What I Hear?" Christie was required to answer three essay questions following the conference to assess what was learned in the classes.

Finance Section

The Property Tax cards were delivered in September, and have been sorted and mailed. The last month of activity on last year's taxes left Robertson County with 4% of property taxes unpaid, and Sumner County with 3% unpaid, for a net 3% delinquency rate on property taxes for the City as a whole. The Tax Clerk attended the Fall Conference for the Tennessee Association of Municipal Clerks and Recorders in Franklin, TN during the month of September. Topics that were covered included the following: Leadership in Times of Disaster, Conflicts in Beliefs and Behaviors, Customer Service, Ethical Behavior, Managing Meetings, Developing Cost Savings, and Teamwork.

Finance Staff continued the preparation of work papers in anticipation of the field work phase of the audit beginning in early October. Work & Greer was unable to schedule staff to begin the audit and assist with work papers in September as we had hoped.

The Finance Director attended an employer benefits seminar in Nashville along with the Fire Chief and staff from Human Resources. Our hope in attending the seminar was to begin collecting information and getting ideas for the re-implementation of a retiree benefit program. There was some valuable insight gained especially in the area of Medicare and Medicare supplements as a potential benefit to include in the package. Additionally the Finance Director assisted staff from the Fire Department in completing the first quarterly report on-line for the SAFER grant, and completed Accounting reports required by the State of Tennessee related to Community Enhancement Grants received by the Parks department. The Finance Director also attended the next installment of the Municipal Management Academy, which focused on Delegation Skills.

September brought the eighth draw on the Series Z-5-C Bonds in the amount of $352,732.02. The total drawn on requisition through the end of September is $2,187,115.44.

The Purchasing Coordinator attended a class for two days in Missouri which addressed Effective Contract Writing. The class was offered by the National Institute for Government Purchasing and will be included in the requirements necessary for the Purchasing Coordinator to obtain certification as Certified Public Procurement Buyer. Some of the highlights from the class include the fact that legal jargon and flowery words are not necessary for an effective contract, a good contract begins with an outline to make sure that all bases are covered. Contract negotiations were also practiced with role-playing sessions in the class.

The Cashier/Receptionist continues to be a great asset and during the month of September assisted with more projects which will increase her knowledge of the City's operations. One major project which has been on our to-do list for quite some time has been the acquisition of W-9 forms for every vendor that the City currently does business with. W-9 forms should be obtained on every vendor before they are set up in the Accounts Payable system. We have obtained these forms as we have established new vendors over the past couple of years, but prior to that W-9's were not obtained from vendors at any point. A mass mailing was made to vendors requesting a completed W-9 in order to finally make the attempt to have a complete set on file as required by the Internal Revenue Service. Time was also spent sitting in on Municipal Court to obtain the experience necessary to serve as back-up for the Court Clerk if needed. Assistance was also given to the Tax Clerk with the sorting and mailing of tax cards and class IV business license renewals.

Purchase Orders – September 2008

Codes	9	$1,289.65
Fire	28	$36,883.72
Police	12	$2,397.12
Human Resources	1	$30.00
Engineering	3	$584.26
Administration	6	$1,628.17
Finance	4	$369.88
Court	1	$11.71
Library	7	$822.02
Wastewater	7	$2,086.43
Public Works	21	$8,808.68
Sanitation	7	$1,444.92
Parks	41	$20,602.64
Cemetery	2	$132.03
Building Maint.	4	$1,273.81
Total	153	$78,365.04
Voids	8	

Emergency Purchase Orders in September 2008

Number	Vendor	Items	Amount	Nature of Emergency	Department
12166E	Eltec	Programmable Timeclock	$315.00	Failure of Lights in School Zone	Engineering
12191E	B&B Signs	Cleaning and re-lettering of 10K banner	$25.00	Not approved as an emergency	Parks
12097E	Boyd Mechanical	Repair Service for Air Conditioner	$129.00	Air Conditioner not working	Police
12098E	Cummins Crosspoint	Repair Service on generator	$279.45	Generator failed	Police

Monthly Performance Indicators

	September	FY
Requests for Information - Administration	2	14
Requests for Information – Finance	3	7
Total New Business Licenses Issued	6	22
Purchase Orders Issued	153	543
Total Invoices Processed	365	997

Human Resources:

- Continued communication with third party administration of partially self-funded health plan
- Assisted Fire Department in orienting new Firefighters (Mike Bogle, Jason Campbell, Mike King, Cary Pettit, Ryan Stone and Brad Williams)
- Assisted Wastewater Dept in recruitment for open Wastewater Tech I position
- Assisted Wastewater Dept in placement of Wastewater Tech I (Jeremy Matthews)
- Assisted Parks Dept in placement of Recreation Attendant (Will Vick)
- Assisted Parks Dept in placement of Seasonal Parks Groundskeeper (Keith Futch)
- Assisted Police Department in recruitment of new officers and reserve officer
- Assisted Library with placement of part time Library Assistant (Jennifer Cruse)
- Assisted departments with worker compensation and safety needs
- Assisted departments with transitional light duty work for employees on worker compensation
- Facilitated annual Municipal Management Academy training
- Performed investigations regarding disciplinary needs for departments
- Updated Job Description Revision tracking
- Updated format for annual performance reviews and dispersed to departments for review
- Attended seminar on Post Employment Benefits
- Constructed report for Medicare Datamatch Audit
- Assisted departments with disciplinary issues
- Conducted exit interviews for outgoing employees
- Continued file auditing for compliance

City of White House
Police Department
Monthly Report for September 2008

Summary of Month's Activities

During the month of September, the Police Department issued 100 Citations (74 speeding), and made 28 arrests. The department answered seventy (79) 911 calls.

Update on Department's Goals and Objectives

- A new digital camera system has been purchased for Corporal Ghee's K-9 vehicle. The new system is all built into a replacement rear view mirror.

Departmental Highlights

- Public Safety Day was held September 1st at the City Park. The White House Police Department participated in the Bike Parade, K-9 demonstration, Bike Safety, and Bike Course. It is estimated 500 people were in attendance at the Public Safety Day with 126 kids participating in the Bike Course.
- Several White House Police Department Officers directed traffic and led the White House Heritage Homecoming Parade on Thursday, September 11th.
- Chief Herman participated in the Kiwanis Club of White House 16th Annual Car Show by presenting a Police Chief's Choice trophy to the car of Chief Herman's choice. Chief Herman presented the award to Joe Patti for his 1923 Roadster.
- Chief Herman attended the Sumner County Drug Task Force meeting on September 24th that was held at the Gallatin Police Department.
- Chief Herman attended the Tennessee Crime Prevention Coalition meeting held at the Ellington Agricultural Center in Nashville.
- Officer Keith Anglin continues to attend the Tennessee Law Enforcement Training Academy in Donelson. He will graduate as a Certified Tennessee Police Officer on October 10th.
- Captain Jeff Mingledorff and Sgt. Eric Enck conducted a Bicycle Safety Program with kids from Heritage & Hope Academy.
- Captain Mingledorff has begun teaching DARE (Drug Abuse Resistance Education) program at Robert F. Woodall Elementary and Heritage & Hope Academy.
- The White House Police Department will be holding a Physical Fitness and Police Entry Exam testing on October 11th. We hope to fill the three positions we have open.

Training

- Chief Jerry Herman attended the LEAD (Leading, Educating, And Developing) class at the University of Virginia September 6th thru 12th. LEAD is a 1-week intensive program offered to department heads, division heads, and senior staff of local government organizations.
- Shellie Hampton, Records Clerk, attended the TIBRS (Tennessee Incident Based Reporting System) Conference September 8th -11th in Pigeon Forge, TN.
- Elaine Agee, Records Clerk, and Holly Ward, Dispatch Supervisor, attended the TENA (Tennessee Emergency Number Association) 911 Conference September 14 -17th in Pigeon Forge, TN.
- Sgt. Jim Ring and Det. Sgt. Pat Brady attended an Advanced Investigative/Intelligence Workshop September 16th in Nashville, TN
- Chief Herman and all Supervisors attended the MMA (Municipal Management Advisory) training on September 19th held in the White House Police Department Training Room.

Monthly Performance Indicators

PATROL	Sept.	To Date
Total Arrests	28	454
Offense Reports	60	512
Traffic Accidents	32	240
Accidents w/Injuries	17	122
DUI Arrest	5	42
Animal Calls	30	366
Drug Arrests	10	172
Motor Assist	13	161
Business Checks	810	12,853
Extra Patrols	221	2.875
Residential Patrols	402	8,034
Assaults	8	101
Property Watches	6	201

Dispatch	September	Year to Date
Calls for Service CADed	788	9,271
Non-CADed Calls	1,941	28,985
Total Calls for Service	2,729	38,255

City of White House
Fire Department
Monthly Report for September 2008

Summary of Month's Activities

The Department responded to 82 requests for service during the month with 48 responses being medical emergencies including one in which an AED was used unsuccessfully to revive a patient. On September 7th at 10:44 am the department was dispatched to a structure fire on Millstone Way. When fire units arrived on scene there was smoke coming from the rear of the structure. The fire was extinguished with a fire extinguisher and the structure ventilated. The fire damage was confined to the kitchen area with smoke damage throughout the home.

Of the five vehicle accidents with injuries, six patients were transported to area hospitals. The more serious of the accidents was a vehicle/pedestrian accident in which a mother and 2 year old child was struck crossing Hwy 76 at Edenway Drive. Both were transported to the hospital with serious injuries.

Fire Station 2 Update:

The work outside continues the masonry on the training tower has begun and approximately 50% of the concrete driveway is complete. The work inside is making progress the casework has been installed, much of the ceiling grid in installed, the walls have been painted, and the tile work in the restrooms is nearing completion. The air conditioning units have arrived and are being installed this week. The project is about 3 months behind due to the weather and the issue with the damaged air units that had to be reordered.

Update on the Department's Goals and Objectives

- Organize a Fire Corps Program by February 1st, 2008**(This project is currently being worked on)**
- Update our Emergency Operations Plan to include changes in contact information and utilize the FIRE Corps Program to assist in the compiling of local resources to add to the EOP by November 30th, 2008
- Complete the annual apparatus fire pump testing by December 1st, 2008
- Complete our annual fire hose testing by October 30th, 2008 **(This project is currently being worked on)**
- Organize a State Fire Academy Basic Firefighter course to be taught at station 2 by April 30th, 2009

Departmental Highlight
The annual Safety Day event was a great success this year as the attendance continues to grow each year. At this year's event we had over 180 children participate in the "Home Fire Safety Challenge" a survival course to teach children skills necessary to survive a fire in the home. We had numerous agencies represented from the state, cities and volunteer fire departments from the surrounding areas.

Also this month was the Firefighter Tuff Challenge at the State Academy with Captain Railey, Firefighter Mike King, and Firefighter Elizabeth Bednarcik participating. Firefighter Bednarcik won the Women's Individual title as state champion again this year.

Department Cost Saving Report
The cost savings for the month was the repair of a leaking shower faucet. Department personnel rebuilt the existing faucet with new parts saving the purchase of a new faucet and the labor cost associated with the repair. Over time it will lower our utility cost per month.

Monthly Performance Indicators

Structure Fires	1	Total Responses for the Month	82
Cooking/Electrical Fires	0	Total Responses Year to Date	677
Vehicle Fires	0		
Grass, Brush, Trash, Fires	1	Total Training Man-hours for the Month	826.5
Hazmat	1	Total Training Man-hours Year to Date	3241.5
False Alarms/Calls	8		
Assist other Governmental Agency	1		
Other Calls	13	Fire Inspections	7
Emergency Medical Responses	48	Fire Preplans	10
Vehicle Accidents (general cleanup)	4	Plat / Plan Reviews	2
Rescue / Vehicle Accidents (with injuries)	5	Fire Investigations	1

City of White House
Public Works
September 2008

SUMMARY OF MONTH'S ACTIVITIES

VEHICLE AND EQUIPMENT MAINTENANCE
For the month of September, the Public Works sanitation trucks had repairs to be completed, but nothing to cause disruption in the daily schedule for citizens refuse collection. The mechanic, however, stayed quite busy working on routine maintenance for the Facility Maintenance, Police, Public Works, Waste Water and Sanitation Departments.

SANITATION AND REFUSE
The Sanitation and Refuse department within Public Works continues to keep the City of White House citizens serviced with minimal complaints. Public Works has had many citizens bringing loads of brush, bagged clippings, bagged grass and leaves to Public Works for disposal. Many citizens took advantage of the recycle collection bin provided by the city, located in the lower lot at the White House Municipal Building. For the month of September the city recycled 29,120 pounds of mixed recyclables.

Monthly Performance Indicators

	Month	Totals	Revenue Received	Revenue year to date
Number of Customers Billed	3574	Net Amount Billed $54,165.00	$54,406.14	$164,401.21

SANITATION
The sanitation and road crew continues to complete monthly brush removal schedules set forth by Supervisor Warren Garrett. The city has been broken down in to 4 areas and brush is collected once per month per area. (See website for a detailed list for each area)

FACILITIES MAINTENANCE
Facilities Maintenance employee, Ted Sikora continues to move around in departments repairing, replacing, painting, renovating and building as requested by department heads.

Department	Total Hours
Administration	38
Codes	67
Engineering	0
Fire	0
Parks	1
Police	1.50
Public Works	20.50
Library	4
Waste Water	0

NEW SERVICES
The Public Works Facility will continue to be a site for Sumner County mobile emissions testing. Dates have been established through December of 2008. The Public works department has begun using the newly purchased wood chipper and woodchips are now available to our citizens. For the month of September, we had a total of 58 citizens utilized the mobile emissions testing station located at the Public Works Facility.

SEPTEMBER 2008 TRUCK TONNAGE AND FUEL COSTS

- 17.20 tons average per day 621,640 pounds for the month of September.
- Total tonnage on truck number 319 was 50.02
- Total tonnage on truck number 320 was 119.48
- Total tonnage on truck number 323 was 141.32
- Total tonnage for the month of September was 310.82
- Total cost of fuel used for truck # 319 $306.57
- Total cost of fuel used for truck # 320 $1,471.01
- Total cost of fuel used for truck # 323 $1,492.14
- Total cost of fuel used for #324 $532.46
- Total cost of fuel for September = $3,802.18

YTD	Total
Tons per day	17.90
Pounds for 3 months	1,902,680.00
Tonnage Truck #319	179.65
Tonnage Truck #320	374.47
Tonnage Truck # 323	396.77
Tonnage for 3 months	950.89
Fuel used Truck #319	$1,378.22
Fuel used Truck #320	$4,324.38
Fuel used Truck # 323	$4,422.49
Fuel used #324	$1,499.95
Fuel used per month	$11,625.04

SEPTEMBER B.M.A. REPORT 2008		
MONTHLY INDICATORS		
STREETS AND ROADS/SANITATION/BUILDING MAINTENANCE		
SERVICES PROVIDED	*TOTAL*	*YTD*
BRUSH PICK UP	240 Stops	1079 Stops
BRUSH TRUCK LOAD	46	192
EMERGENCY CALL OUTS	0	0
DAMAGED CARTS REPLACED	10	33
NEW CARTS FOR NEW HOME CONSTRUCTION	12	33
ADDITIONAL CART REQUEST	2	8
CONCRETE INSTALLED	0	0
CURBS REPAIRED	0	0
SHOULDERS REPAIRED	0 feet	4,538 feet
DRAINAGE REQUESTS	0	1
DRAINAGE WORK	0	250 feet
LITTER PICK UP (50 GALLON BAGS)	39 = 3 bags per day	205 = 10 bags per day
LITTER PICK UP PER DAY (MILES)	6.00 Miles Avg. per day	12 Miles Avg. per day
POTHOLES REPAIRED	19	36
SALT	0	0
SIGNS INSTALLED	2	9
HANDICAPPED PICK UP	77 Homes	231 Houses
MOVE IN SPECIAL PICK UP	4	16
MOVE OUT SPECIAL PICK UP	3	7
DEAD ANIMAL REMOVALS	3	6
CITIZENS REQUESTING A PICK UP DUE TO FORGETTING TO PLACE CART AT CURB AFTER ROUTE HAS BEEN COMPLETED	4	21
VEHICLE REPAIR/MAINTENANCE BY DEPARTMENT	*TOTAL*	
ADMINISTRATION	0	1
CODES AND PLANNING	0	0
FACILITY MAINTENANCE	1	2
FIRE	0	1
PARKS AND LEISURE	0	2
POLICE	9	23
PUBLIC WORKS	8	19
SANITATION	3	11
WASTE WATER	4	9

City of White House
Wastewater Department
Monthly Report for September 2008

Summary of Month's Activities:
Collection system:

Over the past month we have retro fitted forty-nine hydromatic simplex and one duplex system to E-one and installed ten new vacuum valves and controllers within the vacuum systems along with completing two yard repairs. The department has also provided inspections to fourteen new sewer service connections. (Includes repeats due to failures)

Wastewater Treatment:

The plant continues to operate well below permit levels. The preventative maintenance program takes place daily. The bi-weekly maintenance continues to go as scheduled.

Development:

- **Cambria phases II:** Construction complete. Lacking as-built drawings. **No change**
- **Morgan Trace:** Construction Complete awaiting maintenance bond. **No change**
- **Heritage Estates (Tate Property):** Sewer design returned for corrections. **No change**
- **Brook Haven & Cope's Crossing:** Design of the sewer lift station and off-site improvements and draft of cost sharing agreement completed. **No change**
- **Sage Road Medical Complex:** Sewer design returned for corrections. **No change**
- **Bear Creek:** Plans corrected and returned for City approval, awaiting payment before approving. **No change**
- **Heritage High School:** Sewer design returned for corrections.

Goals and Objectives Progress:

- The demonstration of Mission Control's cellular based telemetry system has been installed at the North Palmers Vacuum Station.

Departmental Highlight:

- The department welcomes Jeremy Matthews as the newest member of the Wastewater team as a Wastewater Technician I.
- The Director, Field Supervisor and Chief Plant Operator attended a three day training course provide by Sumner County EMS. Public Works: Planning for and Responding to a Terrorism / WMD Incident. The course provided participants a basic understanding of federal controlling authorities for WMD incidents; an overview of the Incident Command System for WMD/terrorism incidents; and a knowledge of the federal resources available in the event of a WMD/terrorism incident.

Update on Summer Service:

The amount our residential customers saved from the automated adjustments for August service is $14,953.63 or an average of $4.46 per service connection. Summer service is now complete with a total savings of $71,704.93 for an average savings of $21.37 per service connection.

Monthly Performance Indicators

Service Provided	Month	Totals for 2008-2009	Amount Billed	Revenue Received	Revenue Totals 08-09
New service connections (Capacity fees)	14	23	$20,960.00	$20,960.00	$33,460.00
Customers billed	3,699	N/A	Net amount billed $161,616.28	*$174,706.25	$174,706.25
Applications or transfers for service	38	121	$1,675.00	$1,675.00	$5,025.00
Late penalties applied	1,003	3,067	Amount Applied $4,582.84		
Wastewater Adjustments	31	172	N/A	($1,328.24)	($7,310.85)
Administrative Fees	20	72	$2,625.00	$2,625.00	$7,550.00
Service availability Requests	0	0	$0	Included in Admin Fees	Included in Admin Fees
New service inspections (Connection fees)	13	22	$1,950.00	$1,950.00	$3,300.00
Field inspection fee	0	0	$0	Included in Admin Fees	Included in Admin Fees
Cut-offs for non-payment	23	82	$850.00	Included in Admin Fees	Included in Admin Fees
Commitments for service	0	0	$0	$0	$0
Bulk disposal	0	0	$0	$0	$0
Mainline repairs	2	4		**Months Total $201,916.25**	**Total $224,041.25**
Service lines repaired	10	20			
All service requests	277	701			
Billing related service requests	169	331			
L.P. service requests	98	332			
Gravity service requests	0	0			
Vacuum service requests	10	19			
Major lift station repairs	0	4			
	Flow MGD	**Plant Capacity**			
Average Daily Flow (effluent)	.575	1.4 MGD			

*** Revenue is from previous month's service**

City of White House
Planning and Codes Department
September 2008 Monthly Report

Summary of Month's Activities:
Staff attended a TML Policy Review meeting to review possible future State legislation. Staff attended American Planning Association Tennessee section annual conference in Johnson City. Staff had meeting with Waste Water Department and White House Utility District about coordinating review and approval processes. Staff spoke to Greenbrier Planning about Commercial Design Standards including administrative experiences with standards. A public hearing was held for Comprehensive Plan review on September 4th.

Update on Department Objectives:
Comprehensive Land Use Plan Update Project:
The final draft of plan is completed. The Planning Commission will be reviewing plan for adoption at November Planning Commission Meeting. Planning Commissioners have received copy of final draft for review.

Robertson County Growth Boundary Meeting:
The Robertson County Growth Coordinating Committee held second hearing on September 30, 2008. Two local property owners spoke at public hearing about protection of farm land in inter-local annexation agreement and not wanting to be within growth boundary. The Coordinating Committee Staff secretary is compiling a joint plan for official review by Committee. The Committee will make a recommendation to Robertson County and all cities in Robertson County. No date has been set for next meeting of the Committee.

Department Highlight: IT/GIS Position
The City recently added an IT/GIS position in the Planning/Codes Department. Lonnie Goode started in August 2008. The position is to provide computer and phone support for all city departments and set up a unified computer mapping (GIS) service for the City. The City currently has a consultant that provides computer and phones services. The City is working toward the future, in the hope that a consultant will no longer be needed. Mr. Goode is scheduled to attend training for GIS computer programs in October.

Department Cost Savings:
Staff is a member of the International Building Code and American Planning Association. Staff receives member discounts for books and subscriptions.

Monthly Performance Indicators: SEPTEMBER 2008

	Month	FY 08-09Total		Month	FY 08-09 Total
Meetings and ***Agenda Items***			**Inspections**		
Planning Commission	8	25	Residential	70	234
Board of Zoning Appeals	0	3	Commercial	28	130
Construction Appeals Board	0	0			
Training/Study Session	0	1			
Property Maint. Board	0	0			
Permits			**Codes Enforcement Issues**		
New Single Family Residential	4	11	Total Cases	50	193
Multi-Family	8				
Other Residential	31	62	Complaints Rec'd	16	65
New Commercial	1	2			
Industrial Permits	0	**0**			
Other	0	1	**Scheduled Meetings**	17	64
Commercial/Industrial Permits	4	11			
Electrical	75	189			
Sign	4	9			
Occupancy Permits: Res/Comm	17	78			
Other	3	3			

	Month	FY 08-09 Total
Permit Fees	$ 8,495.00	$ 18,372.00
Board and Review Fees	$ 470.00	$ 1,968.00
Impact Fees		
Roads	$12,375.92	$ 17,152.66
Parks	$ 3,544.00	$ 6,316.00
Police	$ 4,124.74	$ 6,678.07
Fire	$ 2,723.22	$ 4,408.15
Total Impact Fees	**22,767.88**	**$ 34,554.88**

Builder Bonds

Total Amount	$ 50,950.00
Deposits	$ 0
Withdrawals	$ 0

Subdivision and Commercial Performance Bonds	34 Bonds @ value of $ 1,721,500

Working Days in Month: 21

City of White House
Parks, Recreation, & Cultural Arts Department
Monthly Report September 2008

Summary of Month's Activities
We have been awarded a 50/50 grant to plant 20 trees at the City Park as part of the Tennessee Agriculture Enhancement Program. Plans were submitted to the Department of Agriculture to plant trees near where the future dog park is being proposed in the vicinity of pavilion #4. The trees to be planted are: 4 Northern Red Oak, 3 Thornless Honeylocust, 5 Lacebark Elm, 5 Pin Oak, and 3 Zelkova. All trees will be 1.75" in caliper. The purpose of the tree project is to intercept storm water, provide shade, and enhance air quality.

The Fall Classic Soccer Tournament was held this month at the soccer complex and it attracted 60 teams. Most of the teams were from the Middle Tennessee area and a few were from Kentucky and Indiana. The WHYS organization hosted the event and did a great job with it as usual.

Currently the department is accepting proposals for the beverage contract with either Pepsi or Coca-Cola. The seven year contract with Pepsi expired in February. The contract this time will not be that long, most likely 4 years. It will benefit the City by providing revenue each year of the contract and other benefits that are yet to be determined.

Fall League Men's Open Softball is now underway. There are ten teams competing in the league. The regular season will continue through October. A double elimination tournament will be played at the end of the regular season.

Church League Basketball registration began in September. The season will begin in November.

Registration is underway for the Harvest Moon 10K, and to reserve a booth space for the Trail of Treats.

Update on Department Goals and Objectives
On September 11th, both Ashley Smith and Steven Russell attended a Turf and Landscape Workshop hosted by the Tennessee State University Cooperative Extension Program, the University of Tennessee, and the Tennessee Department of Agriculture. Continuing education points were awarded for participating in the workshop. All certified commercial pesticide applicators must earn recertification points over three years to maintain a current certification card.

Department Highlight
The second annual Labor Day Bike Parade was a success again this year, drawing in approximately 70 participants. This parade gives children and parents the chance to participate in a fun, non-competitive activity and to decorate their bicycles, wagons, and strollers before proceeding to Safety Day in the City Park. The event is free to the public.

Department Cost Savings Report
The department re-painted parking lot lines on the 31-W side of the soccer complex this month, just prior to the soccer tournament. The lines were sprayed using the football field sprayer, and by doing this job in-house we saved several hundred dollars.

Monthly Performance Indicators

Activity	September 2008	FY to Date
Maintenance Division		
Mowing Hours	**251**	**834**
Pounds of Grass Seed Sown	**25**	**50**
Pounds of Fertilizer Applied	**300**	**2500**
Number of Trees / Shrubs Planted	**0**	**69**
Recreation Division		
Number of Youth Program Participants	0	188
Youth Program Revenue	$523.98	$11,744.98
Number of Adult Program Participants	465	969
Adult Program Revenue	$2099.00	$8,010.00
Number of Programs Offered	6	20
Number of Theatre Production Attendees	0	0
Theatre Production Revenue	$0	$0
Number of Special Events Offered	3	4
Number of Special Events Attendees	70	202
Special Event Revenue	$200.00	$1,600.00
Administration		
Miscellaneous Revenue	$3,865.89	$54,831.71
Number of Shelter Reservations	18	50
Shelter Reservation Revenue	$208.00	$1,348.00
Number of Facility Reservations	38	88
Facility Reservation Revenue	$2,831.75	$5,124.27
Senior Center		
Number of Senior Center Participants	242	711
Number of Senior Center Trips	3	11
Number of Senior Center Trip Participants	22	76
Senior Center Trip Revenue	$4,483.50	$8,275.50
Number of Senior Meals Served	4	12
Number of Senior Meal Participants	330	936
Senior Meal Revenue	$926.00	$2,645.50
Number of Senior Center Programs	5	5
Senior Center Program Revenue	0	0
Nutrition Donation Received	$4,250.00	$4,250.00
Donations	$ 5.77	$13.47

Library Monthly Report
September 2008

-Judy Speight, Director

Summary of September's Activities

TLC conversion was done on October 1st, so we are now using the new software. We closed the library for training on September 29th and 30th and again on October 2nd, 3rd, and 6th. We are experiencing many glitches and are using TLC tech support and the State Network Consultant technician to assist us. It's going to take time and patience to work out all the little problems and really learn to use it.

You may notice in the Performance Indicators that we had zero deleted or lost materials reported. That's because we had to freeze the library catalog for one whole month before the conversion. We will catch up with the things that were set aside during the transition and report on them for October.

We received 3 boxes of 1st Quarter State Funding books and other library materials provided by the Regional Library, but these have not been added to the catalog yet. A whole new procedure is to be created for downloading state and federal orders to the TLC catalog, and we are working with TLC and the regional library to set up the process. 2nd Quarter State Funding for books has been released in the amount of $1,380.

Janet Parchman and Sherry Tackett went to the Tenn-Share Data Fest Workshop and brought back much information and skills in using the new Tennessee Electronic Library genealogy database. Amber Walker and I will go for this training on October 15th.

The Library received the Picturing America grant from the National Endowment for the Humanities in cooperation with the American Library Association. This grant includes a collection of large-scale laminated reproductions of American art depicting our nation's history. After the grant period of one year, we will be able to share this collection with our city's schools. I have also applied for the We the People Bookshelf grant, a collection of classic books for young readers on the theme of Picturing America. Both of these grants are 100% gifts.

The Library Board met on September 11th with all members being present. Subjects for discussion included the current library budget, Interlibrary Loan policy, out-of-county library patrons, reports from the sub-committees, tutoring in the library, the Friends of the Library, the Focus Group and plans to have a booth at the Harvest Moon Bluegrass Festival to promote the library. Copies of the most current draft of the library budget for FY ending June 30, 2008 were distributed and examined. Regional Library Director, Becky Bailey submitted these documents to the board: the Official Service Area Population, Library Board Appointments, and Maintenance of Effort. The first two were signed by Chairman Lane and returned to the State. The MOE agreement will be filled out with the final FY 2007-2008 budget appropriations and expenditures before being presented to the Board of Mayor and Alderman at the November meeting. Evelyn Guill represented our library on September 10th at the annual Library Trustee Workshop on Minimum Standards for TN Public Libraries. Becky Bailey will work with the board on attaining the Minimum Standards for our Level III library. We have already met one new standard. Our Library Board now meets bi-monthly instead of quarterly.

Departmental Highlight

The highlight for this month was making the conversion to the new circulation software.

Department Cost Saving Report

Janet Parchman figured out how to make our own self sticking library mailing/shipping labels this month.

Performance Indicators for September 2008

Official Service Area Population: 12,667

Total Materials Available for Checkout: 23,587 (94 more than August, 2008)

Library Circulation:	4,706
Last Month:	4,824
TOTAL FYTD:	**15,457**
Service Value of: 4,706 X $25 =	*$117,650*
Service Value FYTD:	***$386,425***
Materials Added:	
Local:	39
FYTD:	**554**
Regional	56
FYTD:	8
TOTAL:	**95**
TOTAL FYTD	**612**
Children's Programs:	9
FYTD:	**6**
Attendance:	305
TOTAL FYTD:	**728**
Adult Programs:	1
FYTD:	**3**
Attendance:	7
FYTD:	**21**
Interlibrary Loan Service:	
Borrowed:	30
FYTD:	**83**
Loaned:	3
TOTAL FYTD:	**21**
Tests Proctored:	0
TOTAL FYTD:	**1**
Reference Transactions:	195
Last Month:	200
TOTAL FYTD:	**595**
Wireless Internet Usage:	28
TOTAL FYTD:	**21**
Library Revenue:	$565.14
Last Month:	744.48
TOTAL FYTD:	**$1,982.72**
Voter Registrations:	23
TOTAL FYTD:	30

Computer Users:	546
Last Month:	535
TOTAL FYTD:	**$1,560**
Materials Purged:	
Local:	0
FYTD:	**23**
Regional	0
FYTD:	**22**
TOTAL:	**0**
TOTAL FYTD:	**54**
Materials Lost in Circulation:	
Local:	0
FYTD:	**4**
Regional	0
FYTD:	**0**
TOTAL:	**0**
TOTAL FYTD:	**6**
New Memberships:	
Adult:	54
Juvenile:	29
TOTAL:	**83**
TOTAL FYTD:	**269**
Tutoring Sessions:	0
TOTAL FYTD:	**0**
TN Electronic Library Sessions:	
Inside Library Usage:	101
FYTD:	**2**
Remote Usage:	126
FYTD:	**182**
Total:	**227**
TOTAL FYTD:	**284**
R.E.A.D.S. (Regional Ebooks & Audiobooks Downloads)	
Ebooks	0
Audiobooks	0
TOTAL FYTD:	**0**

(Stats are reported quarterly.)

Engineering Department
Monthly Report
September 2008

Neel-Schaffer, Inc. was hired as the Consultant for the Hwy 76 Sidewalks Project. Engineering will be working closely with them on the project. The Tyree Springs/South Palmers Project has been held up in the TDEC offices for approval since early June and we are hoping for approval soon. New handicap ramps were installed on Apache Trail at thirteen locations. Lastly, two solar school zone flashing signals were installed and are active on Tyree Springs at WHHS.

Monthly Performance Indicators:

Inspections:	Sites	Subdivisions	Other
Erosion & Sediment Control	3	1	
Detention / Retention Pond	4	1	
Storm Drainage	1	0	
Proof-roll (sub-grade & stone)	0	1	
Binder	0	2	
Sidewalks	2	26	
Asphalt topping	1	1	
Performance Bond	2	4	
Maintenance Bond	0	2	
Existing roads for repair			3
Surveying			1

Citizen Complaints:	Calls	Resolved	Outstanding
Drainage	3	3	1
Sidewalk	3	3	0
Roadway	1	0	1
Signs & Signals	8	7	1

Projects:	Estimated Cost
Tyree / Palmers Intersection Improv.	$200,000 / City, County, & State
Paving Contract	$200,000 / City
Roadway Repair Contract	$200,000 / City
Calista Road Drainage	$200,000 / City
Hwy 76 Sidewalks	$585,000 / State, Federal
Hampton Village Drainage	$15,000 / City
Sidewalks and Ramps	$10,000 / City

Purchases:	Cost
26.63 gallons of gas	$ 97
References	$ 0
Professional Fees	$ 235
Seminar / Meeting Fees	$ 0
Office & field supplies	$ 349
Vehicle repairs	$ 0

Training seminars / conferences:

MTAS Municipal Management Academy Part 9 – WHPD
Comprehensive Plan Meeting – City Hall Board Room

CITY COURT REPORT SEPTEMBER 2008

CITATIONS:

TOTAL MONIES COLLECTED FOR THE MONTH	$12,214.50
TOTAL MONIES COLLECTED YTD	**$30,114.75**

STATE FINES:

TOTAL MONIES COLLECTED FOR MONTH	$1,633.30
TOTAL MONIES COLLECTED YTD	**$5,961.99**
TOTAL REVENUE FOR MONTH	**$13,847.80**
TOTAL REVENUE YTD	**$36,076.74**

DISBURSEMENTS

LITIGATION TAX	$331.38
TBI FEES	$0.00
DOS/DOH FINES & FEES	$465.50
RESTITUTION/REFUNDS	$0.00
TRANSFER OUT FROM FINES & COURTS	$0.00
WORTHLESS CHECKS	$0.00
ADM. FEE FOR STATE	$0.00
TOTAL DISBURSEMENTS FOR MONTH	**$796.88**
TOTAL DISBURSEMENTS YTD	**$2,601.68**
ADJUSTED REVENUE FOR MONTH	**$13,050.92**
TOTAL ADJUSTED REVENUE YTD	**$33,475.06**
DONATION TO DRUG FUND FOR MONTH	$1,409.39
TRANSFER TO DRUG FUND	$0.00
	$0.00
DONATIONS YEAR TO DATE	**$3,611.60**
DONATION TO CAMERA FUND FOR MONTH	$0.00
DONATIONS YEAR TO DATE	**$250.00**

CITY COURT CLERK Sharon Jessee

RESOLUTIONS . . .

MEMORANDUM

TO: White House Board of Mayor and Aldermen,
Angie Carrier, City Administrator

FROM: Addam McCormick, Planning/Codes Department

DATE: Thursday October 9, 2008

RE: 31W Town Center Enhancement Grant

The Tennessee Department of Transportation accepts Enhancement Grant applications each year for historic, scenic, landscaping, and sidewalk improvements. The application for 2009 is due November 4th. If the proposed application is approved, staff will prepare the formal application for submittal.

The proposed Town Center project application includes improvements along 800 ft of Hwy 31W from intersection of 31W/SR 76/College Street to intersection of Hwy 31W/SR 76 Portland Road. The improvements include decorative stamped concrete intersections, 12 ft sidewalks, street trees, lights, park benches, dealing with existing overhead utilities, etc. The total project is $850,000. The grant portion would be $825,000. The City would be responsible for $190,000. The City applied for the application in 2003, 2005, and 2007. The project has changed to only include the above listed section of 31W due to recent sidewalk and roadway improvements in the area. The estimated total project cost does include working with the utility companies regarding placing lines underground or moving overhead utilities in the area. During the 2009-2010 budget process, the utilities will need to be considered in the total budget amount for the project.

October 9, 2008

MEMORANDUM

To: Angie Carrier, City Administrator
John Grubbs, Human Resources Director
Board of Mayor and Aldermen

From: Charlotte Soporowski, Finance Director CKS

Re: Identity Theft Policy and FACTA Compliance

In response to the growing threat of identity theft, the United States Congress passed the Fair and Accurate Credit Transactions Act of 2003 (FACTA). This act charged the Federal Trade Commission with developing rules regarding identity theft. The Federal Trade Commission declared the final rules, known as "Red Flag" rules, which have an effective date of November 1, 2008.

As defined in the Red Flag rules, the City of White House is a "creditor" by virtue of the fact that we maintain customer accounts for Wastewater and Sanitation billing. However, there are also other "covered accounts" within the realm of city business that would be subject to these rules. Also defined in the rules, is a "red flag" which is a pattern, practice or specific activity that indicates the possible existence of identity theft.

The rules require that every affected municipality must develop and implement a written Identity Theft Prevention Program that is designated to detect, prevent and mitigate identity theft. The following program has been developed by the University of Tennessee – Municipal Technical Advisory Service as a model for adoption by municipalities in Tennessee. Staff recommends adoption of this model program as a path to compliance for the November 1, 2008 deadline. The program specifically names the Finance Director as the designee with operational responsibility of the program, and the Human Resources Director as the designee responsible for ensuring identity theft training for all required employees and contractors. Approximately 10 employees are scheduled to attend a UT-MTAS training session on this topic on Wednesday, October 15.

It is worthwhile to note that The Federal Trade Commission is authorized to bring action in a federal district court in the event of a knowing violation of FACTA, and penalties for violations are capped at $2,500 per offense. If you have any questions about this policy or compliance to the regulation, please let me know.

RESOLUTION 08-16

A RESOLUTION OF THE BOARD OF MAYOR AND ALDERMEN OF THE CITY OF WHITE HOUSE, TENNESSEE, ADOPTING AN IDENTITY THEFT POLICY

WHEREAS, The Fair and Accurate Credit Transactions Act of 2003, an amendment to the Fair Credit Reporting Act, required rules regarding identity theft protection to be promulgated; and

WHEREAS, Those rules become effective November 1, 2008, and require municipal utilities and other departments to implement an identity theft program and policy, and

WHEREAS, The Board of Mayor and Aldermen has determined that the following policy is in the best interest of the municipality and its citizens. NOW, THEREFORE,

BE IT RESOLVED by the Board of Mayor and Aldermen, that the following is hereby approved:

IDENTITY THEFT POLICY

SECTION 1: BACKGROUND

The risk to the municipality, its employees and customers from data loss and identity theft is of significant concern to the municipality and can be reduced only through the combined efforts of every employee and contractor.

SECTION 2: PURPOSE

The municipality adopts this sensitive information policy to help protect employees, customers, contractors and the municipality from damages related to the loss or misuse of sensitive information.

This policy will:

1. Define sensitive information;
2. Describe the physical security of data when it is printed on paper;
3. Describe the electronic security of data when stored and distributed; and
4. Place the municipality in compliance with state and federal law regarding identity theft protection.

This policy enables the municipality to protect existing customers, reducing risk from identity fraud, and minimize potential damage to the municipality from fraudulent new accounts. The program will help the municipality:

1. Identify risks that signify potentially fraudulent activity within new or existing covered accounts;

2. Detect risks when they occur in covered accounts;

3. Respond to risks to determine if fraudulent activity has occurred and act if fraud has been attempted or committed; and

4. Update the program periodically, including reviewing the accounts that are covered and the identified risks that are part of the program.

SECTION 3: SCOPE

This policy and protection program applies to employees, contractors, consultants, temporary workers, and other workers at the municipality, including all personnel affiliated with third parties.

SECTION 4: POLICY

4.A: Sensitive Information Policy

4.A.1: Definition of Sensitive Information

Sensitive information includes the following items whether stored in electronic or printed format:

4.A.1.a: Credit card information, including any of the following:

1. Credit card number (in part or whole)

2. Credit card expiration date

3. Cardholder name

4. Cardholder address

4.A.1.b: Tax identification numbers, including:

1. Social Security number

2. Business identification number

3. Employer identification numbers

4.A.1.c: Payroll information, including, among other information:

1. Paychecks
2. Pay stubs

4.A.1.d: Cafeteria plan check requests and associated paperwork

4.A.1.e: Medical information for any employee or customer, including but not limited to:

1. Doctor names and claims
2. Insurance claims
3. Prescriptions
4. Any related personal medical information

4.A.1.f: Other personal information belonging to any customer, employee or contractor, examples of which include:

1. Date of birth
2. Address
3. Phone numbers
4. Maiden name
5. Names
6. Customer number

4.A.1.g: Municipal personnel are encouraged to use common sense judgment in securing confidential information to the proper extent. Furthermore, this section should be read in conjunction with the Tennessee Public Records Act and the municipality's open records policy. If an employee is uncertain of the sensitivity of a particular piece of information, he/she should contact their supervisor. In the event that the municipality cannot resolve a conflict between this policy and the Tennessee Public Records Act, the municipality will contact the Tennessee Office of Open Records.

4.A.2: Hard Copy Distribution

Each employee and contractor performing work for the municipality will comply with the following policies:

1. File cabinets, desk drawers, overhead cabinets, and any other storage space containing documents with sensitive information will be locked when not in use.

2. Storage rooms containing documents with sensitive information and record retention areas will be locked at the end of each workday or when unsupervised.

3. Desks, workstations, work areas, printers and fax machines, and common shared work areas will be cleared of all documents containing sensitive information when not in use.

4. Whiteboards, dry-erase boards, writing tablets, etc. in common shared work areas will be erased, removed, or shredded when not in use.

5. When documents containing sensitive information are discarded they will be placed inside a locked shred bin or immediately shredded using a mechanical cross cut or Department of Defense (DOD)-approved shredding device. Locked shred bins are labeled "*Confidential paper shredding and recycling.*" Municipal records, however, may only be destroyed in accordance with the city's records retention policy.

4.A.3: Electronic Distribution

Each employee and contractor performing work for the municipality will comply with the following policies:

1. Internally, sensitive information may be transmitted using approved municipal e-mail. All sensitive information must be encrypted when stored in an electronic format.

2. Any sensitive information sent externally must be encrypted and password protected and only to approved recipients. Additionally, a statement such as this should be included in the e-mail:

   "This message may contain confidential and/or proprietary information and is intended for the person/entity to whom it was originally addressed. Any use by others is strictly prohibited."

SECTION 5: ADDITIONAL IDENTITY THEFT PREVENTION PROGRAM

If the municipality maintains certain covered accounts pursuant to federal legislation, the municipality may include the additional program details.

5.A: Covered accounts

A covered account includes any account that involves or is designed to permit multiple payments or transactions. Every new and existing customer account that meets the following criteria is covered by this program:

1. Business, personal and household accounts for which there is a reasonably foreseeable risk of identity theft; or

2. Business, personal and household accounts for which there is a reasonably foreseeable risk to the safety or soundness of the municipality from identity theft, including financial, operational, compliance, reputation, or litigation risks.

5.B: Red flags

5.B.1: The following red flags are potential indicators of fraud. Any time a red flag, or a situation closely resembling a red flag, is apparent, it should be investigated for verification.

1. Alerts, notifications or warnings from a consumer reporting agency;

2. A fraud or active duty alert included with a consumer report;

3. A notice of credit freeze from a consumer reporting agency in response to a request for a consumer report; or

4. A notice of address discrepancy from a consumer reporting agency as defined in § 334.82(b) of the Fairness and Accuracy in Credit Transactions Act.

5.B.2: Red flags also include consumer reports that indicate a pattern of activity inconsistent with the history and usual pattern of activity of an applicant or customer, such as:

- A recent and significant increase in the volume of inquiries;

- An unusual number of recently established credit relationships;

- A material change in the use of credit, especially with respect to recently established credit relationships; or

- An account that was closed for cause or identified for abuse of account privileges by a financial institution or creditor.

5.C: Suspicious documents

5.C.1: Documents provided for identification that appear to have been altered or forged.

5.C.2: The photograph or physical description on the identification is not consistent with the appearance of the applicant or customer presenting the identification.

5.C.3: Other information on the identification is not consistent with information provided by the person opening a new covered account or customer presenting the identification.

5.C.4: Other information on the identification is not consistent with readily accessible information that is on file with the municipality, such as a signature card or a recent check.

5.C.5: An application appears to have been altered or forged, or gives the appearance of having been destroyed and reassembled.

5.D: Suspicious personal identifying information

5.D.1: Personal identifying information provided is inconsistent when compared against external information sources used by the municipality. For example:

- The address does not match any address in the consumer report;
- The Social Security number (SSN) has not been issued or is listed on the Social Security Administration's Death Master File; or
- Personal identifying information provided by the customer is not consistent with other personal identifying information provided by the customer. For example, there is a lack of correlation between the SSN range and date of birth.

5.D.2: Personal identifying information provided is associated with known fraudulent activity as indicated by internal or third-party sources used by the municipality. For example, the address on an application is the same as the address provided on a fraudulent application

5.D.3: Personal identifying information provided is of a type commonly associated with fraudulent activity as indicated by internal or third-party sources used by the municipality. For example:

- The address on an application is fictitious, a mail drop, or a prison; or
- The phone number is invalid or is associated with a pager or answering service.

5.D.4: The SSN provided is the same as that submitted by other persons opening an account or other customers.

5.D.5: The address or telephone number provided is the same as or similar to the address or telephone number submitted by an unusually large number of other customers or other persons opening accounts.

5.D.6: The customer or the person opening the covered account fails to provide all required personal identifying information on an application or in response to notification that the application is incomplete.

5.D.7: Personal identifying information provided is not consistent with personal identifying information that is on file with the municipality.

5.D.8: When using security questions (mother's maiden name, pet's name, etc.), the person opening the covered account or the customer cannot provide authenticating information beyond that which generally would be available from a wallet or consumer report.

5.E: Unusual use of, or suspicious activity related to, the covered account

5.E.1: Shortly following the notice of a change of address for a covered account, the municipality receives a request for new, additional, or replacement goods or services, or for the addition of authorized users on the account.

5.E.2: A new revolving credit account is used in a manner commonly associated with known patterns of fraud patterns. For example, the customer fails to make the first payment or makes an initial payment but no subsequent payments

5.E.3: A covered account is used in a manner that is not consistent with established patterns of activity on the account. There is, for example:

- Nonpayment when there is no history of late or missed payments;
- A material change in purchasing or usage patterns

5.E.4: A covered account that has been inactive for a reasonably lengthy period of time is used (taking into consideration the type of account, the expected pattern of usage and other relevant factors).

5.E.5: Mail sent to the customer is returned repeatedly as undeliverable although transactions continue to be conducted in connection with the customer's covered account.

5.E.6: The municipality is notified that the customer is not receiving paper account statements.

5.E.7: The municipality is notified of unauthorized charges or transactions in connection with a customer's covered account.

5.E.8: The municipality receives notice from customers, victims of identity theft, law enforcement authorities, or other persons regarding possible identity theft in connection with covered accounts held by the municipality

5.E.9: The municipality is notified by a customer, a victim of identity theft, a law enforcement authority, or any other person that it has opened a fraudulent account for a person engaged in identity theft.

SECTION 6: RESPONDING TO RED FLAGS

6.A: Once potentially fraudulent activity is detected, an employee must act quickly as a rapid appropriate response can protect customers and the municipality from damages and loss.

6.A.1: Once potentially fraudulent activity is detected, gather all related documentation and write a description of the situation. Present this information to the designated authority for determination.

6.A.2: The designated authority will complete additional authentication to determine whether the attempted transaction was fraudulent or authentic.

6.B: If a transaction is determined to be fraudulent, appropriate actions must be taken immediately. Actions may include:

1. Canceling the transaction;
2. Notifying and cooperating with appropriate law enforcement;
3. Determining the extent of liability of the municipality; and
4. Notifying the actual customer that fraud has been attempted.

SECTION 7: PERIODIC UPDATES TO PLAN

7.A: At periodic intervals established in the program, or as required, the program will be re-evaluated to determine whether all aspects of the program are up to date and applicable in the current business environment.

7.B: Periodic reviews will include an assessment of which accounts are covered by the program.

7.C: As part of the review, red flags may be revised, replaced or eliminated. Defining new red flags may also be appropriate.

7.D: Actions to take in the event that fraudulent activity is discovered may also require revision to reduce damage to the municipality and its customers.

SECTION 8: PROGRAM ADMINISTRATION

8.A: Involvement of management

1. The Identity Theft Prevention Program shall not be operated as an extension to existing fraud prevention programs, and its importance warrants the highest level of attention.

2. The Identity Theft Prevention Program is the responsibility of the governing body. Approval of the initial plan must be appropriately documented and maintained.

3. Operational responsibility of the program is delegated to the Finance Director.

8.B: Staff training

1. Staff training shall be conducted for all employees, officials and contractors for whom it is reasonably foreseeable that they may come into contact with accounts or personally identifiable information that may constitute a risk to the municipality or its customers.

2. The Human Resources Director is responsible for ensuring identity theft training for all requisite employees and contractors.

3. Employees must receive annual training in all elements of this policy.

4. To ensure maximum effectiveness, employees may continue to receive additional training as changes to the program are made.

8.C: Oversight of service provider arrangements

1. It is the responsibility of the municipality to ensure that the activities of all service providers are conducted in accordance with reasonable policies and procedures designed to detect, prevent, and mitigate the risk of identity theft.

2. A service provider that maintains its own identity theft prevention program, consistent with the guidance of the red flag rules and validated by appropriate due diligence, may be considered to be meeting these requirements.

3. Any specific requirements should be specifically addressed in the appropriate contract arrangements.

This resolution will take effect immediately upon its passage, the public welfare requiring it.

Approved this 16th day of October, 2008.

_____

John Decker, Mayor

ATTEST:

_____

Christie M. Odenwald, City Recorder

October 10, 2008

MEMORANDUM

To: Board of Mayor and Alderman

From: Angie Carrier
City Administrator

Re: Resolution 08-17

Staff Recommendation: Approval

The last few months have been very questionable in regards to the bond market, as you all know. In discussing the volatile market with our finance consultant from Morgan and Keegan, he has suggested that we move forward with a swap from our variable interest rates to fixed rates. I have attached the explanation of each loan (marked with a star) to this memo for your review. In normal circumstances it is best to have a variety of loans, but this is not the "normal" market and staff believes as that it is in the best interest of the City to be conservative at this point and move all bond issues to a fixed rate. If you have any questions regarding this matter, please feel free to contact me at anytime.

GENERAL FUND

2002 General Obligation Refunding Bonds-The City issued bonds refunding the 1996 General Obligation Refunding and Improvement Bonds in order to take advantage of current lower interest rates, creating a total savings of $60,013. The former bond issue was used to finance parks improvements, equipment for fire and police protection, and the costs of road, bridge and drainage improvements within the City. This issue has an interest rate that varies from 1.750% to 4.0%. *Outstanding principal and interest at 6/30/09-$415,685.*

1999 General Obligation Refunding Bonds-The City issued these bonds for the purpose of refunding the 1992 General Obligation Refunding and Improvement Bonds, that were issued for the purpose of purchasing equipment for public safety and constructing various public works in and for the City. Interest rates on this bond issue vary from 3.25% to 4.25%. *Outstanding principal and interest at 6/30/09-$537,281.25.*

1997 TN Loans IIF2-State of Tennessee-Public Building Authority of Sevier County-This loan agreement was issued to fund general improvements; and is for a variable rate of interest, which is based upon the current market rate for municipal borrowing as determined weekly. The interest rate has been approximately 4% per annum. The general improvements included acquisition of parks improvements, equipment for fire protection, public works, and sanitation services; and construction of expansions for the public works and police department buildings. *Outstanding principal and interest at 6/30/09-$928,800.*

2004 General Obligation Capital Outlay Note-This note was issued through the Tennessee Municipal Bond Fund-Alternative Loan Program for the following purposes: City's 20% match of federal grant to construct Phases II, III, and IV of the Greenway, purchase of new fire pumper (partial funding from accumulated fire impact fees), road improvements at the intersection of South Palmer's Chapel Road and Tyree Springs Road, and parking lot improvements at the Municipal Center. Interest rate on this loan is 3.80%. *Outstanding principal and interest at 6/30/09-$396,458.*

2002 General Obligation Refunding Capital Outlay Note-The City refunded the 1999 Capital Outlay Notes in 2002 to take advantage of lower interest rates. The former notes had an interest rate of 4.10%. The new issue has rates that vary from 1.75% to 3.45%. The savings generated by refunding is $30,534.16. The original notes were issued for the purpose of road and street construction, and parks and recreational facilities improvements. Specific projects included the acquisition of land for the Soccer Complex and Recreation Center, and the purchase of right-of-ways for construction of the Raymond Hirsch Parkway by-pass. *Outstanding principal and interest at 6/30/09-$247,248.*

2000 TN Loans IVE-5-State of Tennessee-Public Building Authority of Sevier County- This loan agreement was issued to fund general improvements and is for a variable rate of interest, which is based upon the current market rate for municipal borrowing as determined weekly. The interest rate has been approximately 4% per annum. Actual principal payments are not scheduled until 2012. The specific improvements included in this issue were the construction of the Soccer Complex and the construction of the Police Administration Building on N. Palmers Chapel and Tyree Springs Road. Also, included in this issue was funding for the architectural design of a Recreation Center. As of May 31, 2006 the debt related to the soccer complex in this issuance was called early and retired. The remaining balance will be paid from Police Impact Fees. *Outstanding principal and interest at 6/30/09-$2,319,000.*

2005 Capital Outlay Note-This note was issued through the Tennessee Municipal Bond Fund-Alternative Loan Program for the following purposes: Purchase of a knuckle boom truck to aid with brush collection in the public works department; and purchase of a new articulating side arm collection truck for the sanitation department, as well as approximately 1,500 of the required collection carts to work with the new truck. Interest rate on this loan is 3.85%. *Outstanding principal and interest at 6/30/09-$242,556.*

2006 Capital Outlay Note-This note was issued to finance the cost to purchase land for future construction of a fire sub-station. Interest rate on this loan is 5.45%. *Outstanding principal and interest at 6/30/09-$140,757.*

2007 TN Loans Z-5-C-State of Tennessee-Public Building Authority of Coffee County - This lo agreement was issued to fund general improvements and is for a variable rate of interest, which i based upon the current market rate for municipal borrowing as determined weekly. The specific improvements included in this issue were the construction of the new Fire Station and the purcha of sanitation equipment. *Outstanding principal and interest at 6/30/09-$4,756,250.*

2007 TDEC Local Government Energy Efficiency Loan-State of Tennessee-Department of Economic and Community Development - This loan agreement was issued to fund the replacem of three HVAC units at the Municipal Center. It is an interest free loan which will be repaid in seven equal annual payments. *Outstanding principal at 6/30/09-$30,446.*

WASTEWATER FUND

1997 TN Loans IIF1-State of Tennessee-Public Building Authority of Sevier County-This loan agreement was issued to fund construction of extensions and improvements to the sewer system and is for a variable rate of interest, which is based upon the current market rate for municipal borrowing as determined weekly. The interest rate has been approximately 5% per annum. *Outstanding principal and interest at 6/30/09-$637,750.*

2002 State Revolving Fund Loan Agreement-between Tennessee Dept. of Environment and Conservation and the Tennessee Local Development Authority, and the City of White House, for the purpose of constructing wastewater treatment facility improvements including an active mechanical treatment system. The interest rate on the loan is 3.70% with a monthly payment required of $20,560. *Outstanding principal and interest at 6/30/09-$3,700,800.*

2002 Sewer Revenue and Tax Refunding Bonds-These bonds were issued for the purpose of refunding the 1996 Sewer Bonds (which had refunded the 1992 Sewer bonds, issued to establish the Lemna wastewater system). The former bonds carried interest rates of 4.0%-5.3%. The Refunding Bonds have interest rates that vary from 1.75% to 4.0%. This refunding generated a total savings to the City of $153,098. *Outstanding principal and interest at 6/30/09-$1,005,000.*

Angie Carrier

From: Hardaman, Tammy [tammy_hardaman@standardandpoors.com]
Sent: Thursday, October 09, 2008 12:15 PM
To: scott.gibson@morgankeegan.com; Angie Carrier
Cc: Jasin, Paul
Subject: Standard & Poor's - City of White House, Tennessee, General Obligation Refunding Bonds, Series 2008

The McGraw-Hill Companies

STANDARD
&POOR'S

Alexander M. Fraser
Managing Director
500 North Akard Street
Lincoln Plaza, Suite 3200
Dallas, TX 75201
tel 214 871-1406
alexander_fraser@standardandpoors.com

Malachy Fallon
Managing Director
500 North Akard Street
Lincoln Plaza, Suite 3200
Dallas, TX 75201
tel 214 871-1402
mal_fallon@standardandpoor

issue no.: 1034010

October 9, 2008

City of White House
105 College Street
White House, TN 37188
Attention: The Honorable John Decker, Mayor

Re: ***US$6,115,000 City of White House, Tennessee, General Obligation Refunding Bonds, Series 2008, dated: Date of Delivery, due: June 1, 2033***

Dear Mayor Decker:

Thank you for your request for a Standard & Poor's rating for the above-referenced obligations. In accepting a Standard & Poor's rating, you agree to accept and comply with this letter and the enclosed Terms and Conditions.

We will make every effort to provide you with the high level of analytical performance and knowledgeable service for which we've become known worldwide. The analytic team from Standard & Poor's is Paul Jasin and Brian Marshall. If you have any questions at any time, please feel free to contact Paul at 214-871-1424 or by email at paul_jasin @standardandpoors.com. Brian can be reached at 214-871-1414 or by email at brian_marshall@standardandpoors.com.

If you have not already done so, please forward a set of all pertinent information to each analyst at the following address:

Standard & Poor's Ratings Services
Public Finance Department
500 North Akard Street
Lincoln Plaza, Suite 3200
Dallas, TX 75201

Please feel free to call or contact me at nypublicfinance@standardandpoors.com if you have any questions or suggestions. In addition, please visit our web site at www.standardandpoors.com for our ratings definitions and criteria, research highlights and related information. We appreciate your business and look forward to working with you.

Sincerely yours,

Standard & Poor's Ratings Services
a division of The McGraw-Hill Companies, Inc.

By: Alexander M. Fraser
Managing Director
th
enclosure
cc: Ms. Angie Carrier
Mr. Scott P. Gibson

STANDARD
&POOR'S

Standard & Poor's Ratings Services
Terms and Conditions
Applicable To
U.S. Public Finance Ratings

Request for a rating. Standard & Poor's issues public finance ratings for a fee upon request from an issuer, or from an underwriter, financial advisor, investor, insurance company, or other entity, provided that the obligor and issuer (if different from the obligor) each has knowledge of the request. The term "issuer/obligor" in these Terms and Conditions means the issuer and the obligor if the obligor is different from the issuer.

Agreement to Accept Terms and Conditions. Standard & Poor's assigns Public Finance ratings subject to the terms and conditions stated herein and in the rating letter. The issuer/obligor's use of a Standard & Poor's public finance rating constitutes agreement to comply in all respects with the terms and conditions contained herein and in the rating letter and acknowledges the issuer/obligor's understanding of the scope and limitations of the Standard & Poor's rating as stated herein and in the rating letter.

Fees and expenses. In consideration of our analytic review and issuance of the rating, the issuer/obligor agrees to pay Standard & Poor's a rating fee. Payment of the fee is not conditioned on Standard & Poor's issuance of any particular rating. In most cases an annual surveillance fee will be charged for so long as we maintain the rating. The issuer/obligor will reimburse Standard & Poor's for reasonable travel and legal expenses if such expenses are not included in the fee. Should the rating not be issued, the issuer/obligor agrees to compensate Standard & Poor's based on the time, effort, and charges incurred through the date upon which it is determined that the rating will not be issued.

Scope of Rating. The issuer/obligor understands and agrees that (i) an issuer rating reflects Standard & Poor's current opinion of the issuer/obligor's overall financial capacity to pay its financial obligations as they come due, (ii) an issue rating reflects Standard & Poor's current opinion of the likelihood that the issuer/obligor will make payments of principal and interest on a timely basis in accordance with the terms of the obligation, (iii) a rating is an opinion and is not a verifiable statement of fact, (iv) ratings are based on information supplied to Standard & Poor's by the issuer/obligor or by its agents and upon other information obtained by Standard & Poor's from other sources it considers reliable, (v) Standard & Poor's does not perform an audit in connection with any rating and a rating does not represent an audit by Standard & Poor's, (vi) Standard & Poor's relies on the issuer/obligor, its accountants, counsel, and other experts for the accuracy and completeness of the information submitted in connection with the rating and surveillance process, (vii) Standard & Poor's undertakes no duty of due diligence or independent verification of any information, (viii) Standard & Poor's does not and cannot guarantee the accuracy, completeness, or timeliness of the information relied on in connection with a rating or the results obtained from the use of such information, (ix) Standard & Poor's may raise, lower, suspend, place on CreditWatch, or withdraw a rating at any time, in Standard & Poor's sole discretion, and (x) a rating is not a "market" rating nor a recommendation to buy, hold, or sell any financial obligation.

Publication. Standard & Poor's reserves the right to publish, disseminate, or license others to publish or disseminate the rating and the rationale for the rating unless the issuer/obligor specifically requests that the rating be assigned and maintained on a confidential basis. If a confidential rating subsequently becomes public through disclosure by the issuer/obligor or a third party other than Standard & Poor's, Standard & Poor's reserves the right to publish it. Standard & Poor's may publish explanations of Standard & Poor's ratings criteria from time to time and nothing in this Agreement shall be construed as limiting Standard & Poor's ability to modify or refine Standard & Poor's criteria at any time as Standard & Poor's deems appropriate.

Information to be Provided by the Issuer/obligor. The issuer/obligor shall meet with Standard & Poor's for an analytic review at any reasonable time Standard & Poor's requests. The issuer/obligor also agrees to provide Standard & Poor's promptly with all information relevant to the rating and surveillance of the rating including information on material changes to information previously supplied to Standard & Poor's. The rating may be affected by Standard & Poor's opinion of the accuracy, completeness, timeliness, and reliability of information

received from the issuer/obligor or its agents. Standard & Poor's undertakes no duty of due diligence or independent verification of information provided by the issuer/obligor or its agents. Standard & Poor's reserves the right to withdraw the rating if the issuer/obligor or its agents fails to provide Standard & Poor's with accurate, complete, timely, or reliable information.

Standard & Poor's Not an Advisor, Fiduciary, or Expert. The issuer/obligor understands and agrees that Standard & Poor's is not acting as an investment, financial, or other advisor to the issuer/obligor and that the issuer/obligor should not and cannot rely upon the rating or any other information provided by Standard & Poor's as investment or financial advice. Nothing in this Agreement is intended to or should be construed as creating a fiduciary relationship between Standard & Poor's and the issuer/obligor or between Standard & Poor's and recipients of the rating. The issuer/obligor understands and agrees that Standard & Poor's has not consented to and will not consent to being named an "expert" under the applicable securities laws, including without limitation, Section 7 of the U.S. Securities Act of 1933.

Limitation on Damages. The issuer/obligor agrees that Standard & Poor's, its officers, directors, shareholders, and employees shall not be liable to the issuer/obligor or any other person for any actions, damages, claims, liabilities, costs, expenses, or losses in any way arising out of or relating to the rating or the related analytic services provided for in an aggregate amount in excess of the aggregate fees paid to Standard & Poor's for the rating, except for Standard & Poor's gross negligence or willful misconduct. In no event shall Standard & Poor's, its officers, directors, shareholders, or employees be liable for consequential, special, indirect, incidental, punitive or exemplary damages, costs, expenses, legal fees, or losses (including, without limitation, lost profits and opportunity costs). In furtherance and not in limitation of the foregoing, Standard & Poor's will not be liable in respect of any decisions made by the issuer/obligor or any other person as a result of the issuance of the rating or the related analytic services provided by Standard & Poor's hereunder or based on anything that appears to be advice or recommendations. The provisions of this paragraph shall apply regardless of the form of action, damage, claim, liability, cost, expense, or loss, whether in contract, statute, tort (including, without limitation, negligence), or otherwise. The issuer/obligor acknowledges and agrees that Standard & Poor's does not waive any protections, privileges, or defenses it may have under law, including but not limited to, the First Amendment of the Constitution of the United States of America.

Term. This Agreement shall terminate when the ratings are withdrawn. Notwithstanding the foregoing, the paragraphs above, "Standard & Poor's Not an Advisor, Fiduciary, or Expert" and "Limitation on Damages", shall survive the termination of this Agreement or any withdrawal of a rating.

Third Parties. Nothing in this Agreement, or the rating when issued, is intended or should be construed as creating any rights on behalf of any third parties, including, without limitation, any recipient of the rating. No person is intended as a third party beneficiary to this Agreement or to the rating when issued.

Binding Effect. This Agreement shall be binding on, and inure to the benefit of, the parties hereto and their successors and assigns.

Severability. In the event that any term or provision of this Agreement shall be held to be invalid, void, or unenforceable, then the remainder of this Agreement shall not be affected, impaired, or invalidated, and each such term and provision shall be valid and enforceable to the fullest extent permitted by law.

Complete Agreement. This Agreement constitutes the complete agreement between the parties with respect to its subject matter. This Agreement may not be modified except in a writing signed by authorized representatives of both parties.

Governing Law. This Agreement and the rating letter shall be governed by the internal laws of the State of New York. The parties agree that the state and federal courts of New York shall be the exclusive forums for any dispute arising out of this Agreement and the parties hereby consent to the personal jurisdiction of such courts.

The information contained in this message is intended only for the recipient, and may be a confidential attorney-client communication or may otherwise be privileged and confidential and protected from disclosure. If the reader of this message is not the intended recipient, or an employee or agent responsible for delivering this message to the intended recipient, please be aware that any dissemination or copying of this communication is strictly prohibited. If you have received this communication in error, please immediately notify us by replying to the message and deleting it from your computer. The McGraw-Hill Companies, Inc. reserves the right, subject to applicable local law, to monitor and review the content of any electronic message or information sent to or from McGraw-Hill employee e-mail addresses without informing the sender or recipient of the message.

RESOLUTION AUTHORIZING THE SALE AND PROVIDING THE DETAILS OF NOT-TO-EXCEED $6,150,000 GENERAL OBLIGATION REFUNDING BONDS, SERIES 2008, OF THE CITY OF WHITE HOUSE, TENNESSEE, AND PROVIDING FOR THE LEVY OF AD VALOREM TAXES IN CONNECTION THEREWITH

WHEREAS, the Board of Mayor and Aldermen (the "Board") of the City of White House, Tennessee (the "Issuer") after due deliberation, has determined that it is appropriate to issue its not-to-exceed $6,150,000 General Obligation Refunding Bonds, Series 2008 (the "Bonds"), pursuant to authority of Sections 9-21-101 et seq. of the Tennessee Code Annotated, as amended, and other applicable provisions of law; and

WHEREAS, the proceeds of the Bonds will be used to refund and/or retire all or a portion of the following outstanding obligations of the Issuer (the "Refunded Obligations"):

> Loan Agreement (Series II-F-1) dated as of September 1, 1997, between The Public Building Authority of Sevier County, Tennessee and the Issuer, currently outstanding in the principal amount of $565,000.
>
> Loan Agreement (Series II-F-2) dated as of September 1, 1997, between The Public Building Authority of Sevier County, Tennessee and the Issuer, currently outstanding in the principal amount of $855,000.
>
> Loan Agreement ($3,500,000 Series IV-E-5) dated as of October 1, 2000, between The Public Building Authority of Sevier County, Tennessee and the Issuer, currently outstanding in the principal amount of $1,630,000.
>
> $2,900,000 Loan Agreement (Series Z-5-C) dated as of October 1, 2007, between The Public Building Authority of Coffee County, Tennessee and the Issuer, currently outstanding in the principal amount of $2,900,000.

WHEREAS, the Board desires to consolidate the Refunded Obligations into a single bond issue, to restructure the payment of principal of and interest on the Refunded Obligations

and to change from a variable rate to a fixed rate and thereby reduce its variable rate interest exposure, in order to give the Issuer more certainty in its financial obligations; and

WHEREAS, the net proceeds from the sale of the Bonds after payment of issuance expenses will be used by the Issuer for the purpose of paying the principal of, premium, if any, and interest on the Refunded Obligations, as provided herein; and

WHEREAS, the plan of refunding of the Refunded Obligations has been submitted to the State Director of Local Finance as required by Section 9-21-903, Tennessee Code Annotated, as amended, and he has acknowledged receipt thereof to the Issuer and submitted his report thereon to the Issuer; and

WHEREAS, prior to the issuance and sale of the Bonds at a negotiated sale, it is necessary that the Issuer submit to the State Director of Local Finance pursuant to Section 9-21-910(c) certain information with respect to the Bonds of the Issuer proposed to be issued and to receive his approval for a private negotiated sale; and

WHEREAS, the required information has been submitted and the approval of the State Director of Local Finance for a private negotiated sale has been received by the Issuer; and

WHEREAS, it is appropriate for this Board to provide certain details of the Bonds and the pledge of revenues thereto at this time; and

WHEREAS, it is also appropriate to authorize the Mayor to determine the exact principal amount, interest rates and certain other terms of the Bonds and to finalize the sale of the Bonds to the ultimate purchaser.

NOW, THEREFORE, BE IT RESOLVED by the Board of Mayor and Aldermen of the City of White House, Tennessee, as follows:

SECTION 1. In order to refund all or a portion of the Issuer's obligations under the Loan Agreement (Series II-F-1) dated as of September 1, 1997, between The Public Building Authority of Sevier County, Tennessee and the Issuer, currently outstanding in the principal amount of $565,000; the Loan Agreement (Series II-F-2) dated as of September 1, 1997, between The Public Building Authority of Sevier County, Tennessee and the Issuer, currently outstanding in the principal amount of $855,000; the Loan Agreement ($3,500,000 Series IV-E-5) dated as of October 1, 2000, between The Public Building Authority of Sevier County, Tennessee and the Issuer, currently outstanding in the principal amount of $1,630,000; and the $2,900,000 Loan Agreement (Series Z-5-C) dated as of October 1, 2007, between The Public Building Authority of Coffee County, Tennessee and the Issuer, currently outstanding in the principal amount of $2,900,000, the Issuer shall borrow the amount of not-to-exceed $6,150,000 and General Obligation Refunding Bonds, Series 2008, of the Issuer in the principal amount borrowed shall be issued pursuant to Sections 9-21-101 et seq. of the Tennessee Code Annotated, as amended, and other applicable provisions of law.

SECTION 2. The following terms shall have the following meanings in this resolution unless the text expressly or by necessary implication requires otherwise:

(a) "Bond Fund" shall mean the fund used to pay principal and interest on the Bonds as they become due;

(b) "Bond Purchase Agreement" means a Bond Purchase Agreement, dated as of the date of sale of the Bonds, entered into between the Issuer and the Underwriter, if any, in the form attached hereto as Exhibit A and hereby incorporated by reference, subject to such changes therein as shall be permitted by Section 5 hereof;

(c) "Bonds" shall mean the General Obligation Refunding Bonds, Series 2008 of the Issuer in an aggregate principal amount of not-to-exceed $6,150,000 authorized to be issued by this resolution;

(d) "Bond Registrar" shall mean the registration and paying agent for the Bonds appointed by the Issuer pursuant to Section 10, or any successor as from time to time designated by the Governing Body.

(e) "Book-Entry Form" or "Book-Entry System" means a form or system, as applicable, under which physical bond certificates in fully registered form are issued to a Depository, or to its nominee as Registered Owner, with the certificate of bonds being held by and "immobilized" in the custody of such Depository, and under which records maintained by persons, other than the Issuer or the Bond Registrar, constitute the written record that identifies, and records the transfer of, the beneficial "book-entry" interests in those bonds;

(f) "Code" shall mean the Internal Revenue Code of 1986, as amended and regulations promulgated thereunder;

(g) "Depository" shall mean any securities depository that is a clearing agency under federal laws operating and maintaining, with it participants or otherwise, a Book-Entry System, including, but not limited to, DTC;

(h) "DTC" means the Depository Trust Company, a limited purpose company organized under the laws of the State of New York, and its successors and assigns;

(i) "DTC Participant(s)" means securities brokers and dealers, banks, trust companies and clearing corporations that have access to the DTC System;

(j) "Fiscal Year" shall mean the twelve-month period beginning on July 1 of each year and ending on the last day of June of the following year;

(k) "Governing Body" shall mean the Board of Mayor and Aldermen of the Issuer;

(l) "Issuer" shall mean the City of White House, Tennessee;

(m) "Mayor" shall mean the duly elected Mayor of the Issuer from time to time.

(n) "Obligations of the United States of America" shall mean direct obligations of, or obligations the principal of and interest on which are guaranteed by, the United States government or obligations of any agency or instrumentality of the United States of America which are permitted investments under Tennessee law for the purposes for which they are to be purchased and/or held;

(o) "Refunded Obligations" shall mean all or a portion of the unpaid and outstanding balance of the Issuer's obligations under (i) Loan Agreement (Series II-F-1) dated as of September 1, 1997, between The Public Building Authority of Sevier County, Tennessee and the Issuer, currently outstanding in the principal amount of $565,000, (ii) the Loan Agreement Series II-F-2) dated as of September 1, 1997, between The Public Building Authority of Sevier County, Tennessee and the Issuer, currently outstanding in the principal amount of $855,000, (iii) the Loan Agreement ($3,500,000 Series IV-E-5) dated as of October 1, 2000, between The Public Building Authority of Sevier County, Tennessee and the Issuer, currently outstanding in the principal amount of $1,630,000, and (iv) the $2,900,000 Loan Agreement Series Z-5-C) dated as of October 1, 2007, between The Public Building Authority of Coffee County, Tennessee and the Issuer, currently outstanding in the principal amount of $2,900,000, to be refunded pursuant to this resolution;

(p) "System" shall mean the complete sewer system of the Issuer and all sewer system properties of every nature hereafter owned by the Issuer.

(q) "Underwriter" shall mean Morgan Keegan & Company Inc., Knoxville, Tennessee.

SECTION 3. Findings of the Governing Body. It is hereby found and determined by the Governing Body as follows:

(a) The refunding of the Refunded Obligations as set forth herein through the issuance of the Bonds will consolidate the Refunded Obligations into a single bond issue, will restructure the payment of principal of and interest on the Refunded Obligations, will change the Issuer's indebtedness as evidenced by the Refunded Obligations from a variable rate to a fixed rate and thereby reduce the Issuer's variable rate interest exposure, and will provide the Issuer more certainty in its financial obligations;

(b) The proceeds from the sale of the Bonds and other funds of the Issuer, together with investment income therefrom, will be sufficient to pay principal of, premium, if any, and interest on the Refunded Obligations, within ninety (90) days after the issuance of the Bonds;

(c) The Issuer will be able to amortize the Bonds, together with all other bonds, notes and other financial obligations now outstanding and all additional obligations proposed to be issued by the Issuer; and

(d) The proposed private negotiated sale being authorized by this resolution is feasible and in the best interests of the Issuer.

SECTION 4. The Mayor is hereby authorized and directed to finalize the sale of not-to-exceed $6,150,000 General Obligation Refunding Bonds, Series 2008, to determine the principal amount of the Bonds not to exceed $6,150,000 to be actually issued, to determine the method of sale as authorized in Section 5, to effect adjustments in the maturity schedule and optional redemption dates set forth herein as authorized in Section 8, and to set the interest rates on the Bonds as authorized in Section 8 as the Mayor believes in his discretion to be in the best interests of the Issuer. The determinations made by the Mayor, as described above, and the finalization of the details of the Bonds and sale of the Bonds to the successful bidder or to the Underwriter by the Mayor shall be binding on the Issuer and no further action by the Governing Body with respect thereto shall be required. The Mayor shall cause, if advantageous to the Issuer, all or a portion of the Bonds to be insured by one or more bond insurance policies issued by one or more nationally recognized bond insurance companies so long as it is demonstrated to the Mayor's satisfaction either (i) that such insurance is necessary to sell the Bonds, or the portion thereof to be insured, or (ii) the present value of the projected savings in interest costs to the Issuer as a result of obtaining such bond insurance exceeds the premium cost to the Issuer for such bond insurance.

SECTION 5. The Mayor is hereby authorized to sell the Bonds to the Underwriter at a private negotiated sale as the Mayor deems in his discretion to be in the best interests of the Issuer at a price of not less than 98.0% of the par value of the Bonds actually issued, plus accrued interest. In connection with such private negotiated sale, the Mayor is authorized to execute and deliver a Bond Purchase Agreement with the Underwriter providing for the purchase and sale of the bonds substantially in the form of Exhibit A attached hereto with such changes as

shall be approved by the Mayor, his execution thereof to constitute conclusive evidence of his approval of all such changes.

SECTION 6. The Mayor and City Recorder, working with the Underwriter, are hereby authorized and directed to provide for the preparation and distribution, electronic or otherwise, of a Preliminary Official Statement describing the Bonds and any other bonds or notes which in the discretion of the Mayor are sold at the same time as the Bonds. After the Bonds have been sold, the Mayor and the City Recorder shall make such completions, omissions, insertions and changes in the Preliminary Official Statement not inconsistent with this resolution as are necessary or desirable to complete it as a final Official Statement for purposes of Rule 15c2-12(e)(3) of the Securities and Exchange Commission. The Mayor and City Recorder shall arrange for the delivery of a reasonable number of copies of the Official Statement within seven business days after the Bonds have been sold to the Underwriter, to each potential investor requesting a copy of the Official Statement and to each person to whom such Underwriter and members of its selling group initially sell the Bonds.

The Mayor and City Recorder are authorized, on behalf of the Issuer, to deem the Preliminary Official Statement and the Official Statement in final form, each to be final as of its date within the meaning of Rule 15c2-12(b)(1), except for the omission in the Preliminary Official Statement of certain pricing and other information allowed to be omitted pursuant to such Rule 15c2-12(b)(1). The distribution of the Preliminary Official Statement and the Official Statement in final form shall be conclusive evidence that each has been deemed in final form as of its date by the Issuer except for the omission in the Preliminary Official Statement of such pricing and other information.

SECTION 7. Subject to the adjustments permitted pursuant to Section 8, the Bonds shall be designated "General Obligation Refunding Bonds, Series 2008," shall be dated as of their date of issuance, shall be numbered from R-1 upward, shall be issued in fully registered, book-entry only form, without coupons in the denomination of $5,000 (or integral multiples thereof), and shall be subject to prior redemption as set forth below. Bonds may be initially issued in temporary form exchangeable for definitive Bonds when ready for delivery. Until exchanged for definitive Bonds, the temporary Bonds shall be entitled to the same benefits as definitive Bonds authenticated and delivered hereunder.

SECTION 8. The Bonds shall bear interest, not exceeding 5.50%, as designated by the Mayor, payable semiannually on June 1 and December 1 of each year commencing June 1, 2009, shall mature June 1, in the years and in the amounts as follows:

YEAR	AMOUNT
2009	$ 270,000
2010	$ 225,000
2011	$ 255,000
2012	$ 290,000
2013	$ 325,000
2014	$ 455,000
2015	$ 465 000
2016	$ 465 000
2017	$ 485 000
2018	$ 360 000

2019	$ 400 000
2020	$ 420,000
2021	$ 100,000
2022	$ 100,000
2023	$ 100,000
2024	$ 125,000
2025	$ 125,000
2026	$ 125,000
2027	$ 125,000
2028	$ 125,000
2029	$ 145,000
2030	$ 145,000
2031	$ 145,000
2032	$ 175,000
2033	$ 200,000
Total	$ 6,150,000

The Mayor is authorized to increase or decrease the amount of each maturity, to change the dated date of the Bonds to a date other than their date of issuance, to sell the Bonds in one or more emissions, to change the Series designation of the Bonds, to adjust the principal and interest payment dates of the Bonds, to change or extend the maturity dates of the Bonds, and to change the optional redemption dates and provide for a premium not to exceed two percent (2%)

of the par amount to be redeemed, such adjustments to be made as the Mayor in his sole discretion shall deem most advantageous to the Issuer, provided that the aggregate amount of Bonds issued pursuant to this resolution shall not exceed the principal amount set forth in Section 1. The Mayor is authorized to sell the Bonds, or any maturities thereof, as term bonds with mandatory redemption requirements corresponding to the maturities set forth herein or as determined by the Mayor. In the event any or all the Bonds are sold as term bonds, the Issuer shall redeem term bonds on redemption dates corresponding to the maturity dates set forth herein, in aggregate principal amounts equal to the maturity amounts established pursuant to this Section 8 for each redemption date, as such maturity amounts may be adjusted pursuant to this Section 8, at a price of par plus accrued interest thereon to the date of redemption. The term bonds to be redeemed within a single maturity shall be selected in the manner described in Section 9.

SECTION 9. Subject to the adjustments permitted pursuant to Section 8 hereof, the Bonds maturing June 1, 2009 through June 1, 2018 shall mature without option of prior redemption. Bonds maturing June 1, 2019 and thereafter shall be subject to redemption on June 1, 2018 and at any time thereafter at a redemption price of par plus interest accrued to the redemption date.

If less than all the Bonds shall be called for redemption, the maturities to be redeemed shall be selected by the Governing Body in its discretion. If less than all of the Bonds within a single maturity shall be called for redemption, the Bonds within the maturity to be redeemed shall be selected as follows:

(a) if the Bonds are being held under a Book-Entry System by DTC, or a successor Depository, the Bonds to be redeemed shall be determined by DTC, or such successor Depository, by lot or such other manner as DTC, or such successor Depository, shall determine; or

(b) if the Bonds are not being held under a Book-Entry System by DTC, or a successor Depository, the Bonds within the maturity to be redeemed shall be selected by the Bond Registrar by lot or such other random manner as the Bond Registrar in its discretion shall determine.

At its option, to be exercised on or before the forty-fifth (45th) day next preceding any such mandatory redemption date, the Issuer may (i) deliver to the Bond Registrar for cancellation Bonds to be redeemed, in any aggregate principal amount desired, and/or (ii) receive a credit in respect of its redemption obligation under this mandatory redemption provision for any Bonds of the maturity to be redeemed which prior to said date have been purchased or redeemed (otherwise than through the operation of this mandatory sinking fund redemption provision) and canceled by the Bond Registrar and not theretofore applied as a credit against any redemption obligation under this mandatory sinking fund provision. Each Bond so delivered or previously purchased or redeemed shall be credited by the Bond Registrar at 100% of the principal amount thereof on the obligation of the Issuer on such payment date and any excess shall be credited on future redemption obligations in chronological order, and the principal amount of Bonds to be redeemed by operation of this mandatory sinking fund provision shall be accordingly reduced. The Issuer shall on or before the forty-fifth (45th) day next preceding each payment date furnish the Bond Registrar with its certificate indicating whether or not and to what extent the provisions

of clauses (i) and (ii) of this paragraph are to be availed of with respect to such payment and confirm that funds for the balance of the next succeeding prescribed payment will be paid on or before the next succeeding payment date.

Notice of call for redemption, whether optional or mandatory, shall be given by the Bond Registrar on behalf of the Issuer not less than thirty (30) nor more than sixty (60) days prior to the date fixed for redemption by sending an appropriate notice to the registered owners of the Bonds to be redeemed by first-class mail, postage prepaid, at the addresses shown on the Bond registration records of the Bond Registrar as of the date of the notice; but neither failure to mail such notice nor any defect in any such notice so mailed shall affect the sufficiency of the proceedings for redemption of any of the Bonds for which proper notice was given. As long as DTC, or a successor Depository, is the registered owner of the Bonds, all redemption notices shall be mailed by the Bond Registrar to DTC, or such successor Depository, as the registered owner of the Bonds, as and when above provided, and neither the Issuer nor the Bond Registrar shall be responsible for mailing notices of redemption to DTC Participants or Beneficial Owners. Failure of DTC, or any successor Depository, to provide notice to any DTC Participant or Beneficial Owner will not affect the validity of such redemption. The Bond Registrar shall mail said notices as and when directed by the Issuer pursuant to written instructions from an authorized representative of the Issuer (other than for a mandatory sinking fund redemption, notices of which shall be given on the dates provided herein) given at least forty-five (45) days prior to the redemption date (unless a shorter notice period shall be satisfactory to the Bond Registrar). From and after the redemption date, all Bonds called for redemption shall cease to

bear interest if funds are available at the office of the Bond Registrar for the payment thereof and if notice has been duly provided as set forth herein.

SECTION 10. The Issuer hereby appoints Regions Bank, Nashville, Tennessee as the initial paying agent and bond registrar (the "Bond Registrar") with respect to the Bonds and authorizes and directs the Bond Registrar to maintain Bond registration records with respect to the Bonds, to authenticate and deliver the Bonds as provided herein, either at original issuance or upon transfer, to effect transfers of the Bonds, and to make all payments of principal and interest with respect to the Bonds as provided herein, and to cancel and destroy Bonds which have been paid at maturity or upon earlier redemption or submitted for exchange, transfer or cancellation and to furnish the Issuer with a certificate of destruction. The Bond Registrar shall maintain registration books for the registration and registration of transfer of the Bonds, which books shall be kept in a manner that complies with the requirements of Section 149 of the Internal Revenue Code of 1986, as amended, and Regulations thereunder (or under corresponding provisions of prior law, if applicable) for recordkeeping relating to "registration-required bonds" and in accordance with the Tennessee Public Obligations Registration Act (T.C.A. §9-19-101 et seq., as amended).

SECTION 11. The Bonds shall be payable, both principal and interest, in lawful money of the United States of America at designated corporate trust office of the Bond Registrar. The Bond Registrar shall make all interest payments with respect to the Bonds on each interest payment date directly to the registered owners as shown on the Bond registration records maintained by the Bond Registrar as of the close of business on the fifteenth day of the month next preceding the interest payment date (the "Regular Record Date") by depositing such

payment in the United States mail, postage prepaid, addressed to such owners at such owners' addresses shown on said Bond registration records, without, except for final payment, the presentation or surrender of such registered Bonds, and all such payments shall discharge the obligations of the Issuer in respect of such Bonds to the extent of the payments so made. Payment of principal of and premium, if any, on the Bonds shall be made upon presentation and surrender of such Bonds to the Bond Registrar as the same shall become due and payable. In the event the Bonds are no longer registered in the name of DTC, or a successor Depository, if requested by the Owner of at least $1,000,000 in aggregate principal amount of the Bonds, payment of interest on such Bonds shall be paid by wire transfer to a bank within the continental United States or deposited to a designated account if such account is maintained with the Bond Registrar and written notice of any such election and designated account is given to the Bond Registrar prior to the record date.

The Bonds are transferable only by presentation to the Bond Registrar by the registered owner, or his legal representative duly authorized in writing, of the registered Bond(s) to be transferred with the form of assignment on the reverse side thereof (or attached thereto) completed in full and signed with the name of the registered owner as it appears upon the face of the Bond(s) accompanied by appropriate documentation necessary to prove the legal capacity of any legal representative of the registered owner. Upon receipt of the Bond(s) in such form and with such documentation, if any, the Bond Registrar shall issue a new Bond or Bonds to the assignee(s) in such authorized denominations, as requested by the registered owner requesting transfer. No charge shall be made to any registered owner for the privilege of transferring any Bond, provided that any transfer tax relating to such transaction shall be paid by the owner

requesting transfer. The person in whose name any Bond shall be registered shall be deemed and regarded as the absolute owner thereof for all purposes and neither the Issuer nor the Bond Registrar shall be affected by any notice to the contrary, including, but not limited to, any previous transfer request not accompanied by acceptable documentation.

The Bonds shall be signed by the Mayor with his manual or facsimile signature, shall be attested by the City Recorder by his or her manual or facsimile signature, and shall have imprinted or impressed thereon the official seal of the Issuer (or a facsimile thereof).

The Bond Registrar is hereby authorized to authenticate and deliver the Bonds from time to time to the original purchasers thereof or as it or they may designate upon receipt by the Issuer of the proceeds of the sale thereof, together with any necessary documentation, and to authenticate and deliver Bonds in exchange for Bonds of the same principal amount delivered for transfer upon receipt of the Bond(s) to be transferred in proper form with proper documentation as hereinabove described. The Bonds shall not be valid for any purpose unless authenticated by the Bond Registrar by the manual signature of an officer thereof on the certificate set forth herein on the Bond form.

In case any Bond shall become mutilated, or be lost, stolen, or destroyed, the Issuer, in its discretion, shall issue, and the Bond Registrar shall authenticate and deliver a new Bond of like tenor, amount, maturity and date, in exchange and substitution for, and upon the cancellation of, the mutilated Bond, or in lieu of and substitution for such lost, stolen or destroyed Bond, or if any such Bond shall have matured or shall be about to mature, instead of issuing a substituted Bond the Issuer may pay or authorize payment of such Bond without surrender thereof. In every case, the applicant shall furnish evidence satisfactory to the Issuer and the Bond Registrar of the

destruction, theft or loss of such Bond, and indemnity satisfactory to the Issuer and the Bond Registrar, and the Issuer may charge the applicant for the issue of such new Bond an amount sufficient to reimburse the Issuer for the expense incurred by it in the issue thereof.

Any interest on any Bond that is payable but is not punctually paid or duly provided for on any interest payment date (hereinafter "Defaulted Interest") shall forthwith cease to be payable to the registered owner on the relevant Regular Record Date; and, in lieu thereof, such Defaulted Interest shall be paid by the Issuer to the persons in whose names the Bonds are registered at the close of business on a date (the "Special Record Date") for the payment of such Defaulted Interest, which shall be fixed in the following manner: the Issuer shall notify the Bond Registrar in writing of the amount of Defaulted Interest proposed to be paid on each Bond and the date of the proposed payment, and at the same time the Issuer shall deposit with the Bond Registrar an amount of money equal to the aggregate amount proposed to be paid in respect of such Defaulted Interest or shall make arrangements satisfactory to the Bond Registrar for such deposit prior to the date of the proposed payment, such money when deposited to be held in trust for the benefit of the persons entitled to such Defaulted Interest as in this Section provided. Thereupon, not less than ten (10) days after the receipt by the Bond Registrar of the notice of the proposed payment, the Bond Registrar shall fix a Special Record Date for the payment of such Defaulted Interest which Date shall be not more than fifteen (15) nor less than ten (10) days prior to the date of the proposed payment to the registered owners. The Bond Registrar shall promptly notify the Issuer of such Special Record Date and, in the name and at the expense of the Issuer, not less than ten (10) days prior to such Special Record Date, shall cause notice of the proposed payment of such Defaulted Interest and the Special Record Date therefor to be mailed, first class

postage prepaid, to each registered owner at the address thereof as it appears in the Bond registration records maintained by the Bond Registrar as of the date of such notice. Nothing contained in this Section or in the Bonds shall impair any statutory or other rights in law or in equity of any registered owner arising as a result of the failure of the Issuer to punctually pay or duly provide for the payment of principal of, premium, if any, and interest on the Bonds when due.

The Bond Registrar shall not be required to transfer or exchange any Bond during the period commencing on a Regular or Special Record Date and ending on the corresponding interest payment date of such Bond, nor to transfer or exchange any Bond after the publication of notice calling such Bond for redemption has been made, nor to transfer or exchange any Bond during the period following the receipt of instructions from the Issuer to call such Bond for redemption; provided, the Bond Registrar, at its option, may make transfers after any of said dates. No charge shall be made to any registered owner for the privilege of transferring any Bond, provided that any transfer tax relating to such transaction shall be paid by the registered owner requesting transfer. The person in whose name any Bond shall be registered shall be deemed and regarded as the absolute owner thereof for all purposes and neither the Issuer nor the Bond Registrar shall be affected by any notice to the contrary whether or not any payments due on the Bonds shall be overdue. The Bonds, upon surrender to the Bond Registrar, may, at the option of the registered owner, be exchanged for an equal aggregate principal amount of the Bonds of the same maturity in any authorized denomination or denominations.

Except as otherwise provided in this resolution, the Bonds shall be registered in the name of Cede & Co., as nominee of DTC, which will act as securities depository for the Bonds.

References in this Section to a Bond or the Bonds shall be construed to mean the Bond or the Bonds that are held under the Book-Entry System. One Bond for each maturity shall be issued to DTC and immobilized in its custody. A Book-Entry System shall be employed, evidencing ownership of the Bonds in authorized denominations, with transfers of beneficial ownership effected on the records of DTC and the DTC Participants pursuant to rules and procedures established by DTC.

Each DTC Participant shall be credited in the records of DTC with the amount of such DTC Participant's interest in the Bonds. Beneficial ownership interests in the Bonds may be purchased by or through DTC Participants. The holders of these beneficial ownership interests are hereinafter referred to as the "Beneficial Owners." The Beneficial Owners shall not receive the Bonds representing their beneficial ownership interests. The ownership interests of each Beneficial Owner shall be recorded through the records of the DTC Participant from which such Beneficial Owner purchased its Bonds. Transfers of ownership interests in the Bonds shall be accomplished by book entries made by DTC and, in turn, by DTC Participants acting on behalf of Beneficial Owners. SO LONG AS CEDE & CO., AS NOMINEE FOR DTC, IS THE REGISTERED OWNER OF THE BONDS, THE BOND REGISTRAR SHALL TREAT CEDE & CO., AS THE ONLY HOLDER OF THE BONDS FOR ALL PURPOSES UNDER THIS RESOLUTION, INCLUDING RECEIPT OF ALL PRINCIPAL OF, PREMIUM, IF ANY, AND INTEREST ON THE BONDS, RECEIPT OF NOTICES, VOTING AND REQUESTING OR DIRECTING THE BOND REGISTRAR TO TAKE OR NOT TO TAKE, OR CONSENTING TO, CERTAIN ACTIONS UNDER THIS RESOLUTION.

Payments of principal, interest, and redemption premium, if any, with respect to the Bonds, so long as DTC is the only owner of the Bonds, shall be paid by the Bond Registrar directly to DTC or its nominee, Cede & Co. as provided in the Letter of Representation relating to the Bonds from the Issuer and the Bond Registrar to DTC (the "Letter of Representation"). DTC shall remit such payments to DTC Participants, and such payments thereafter shall be paid by DTC Participants to the Beneficial Owners. The Issuer and the Bond Registrar shall not be responsible or liable for payment by DTC or DTC Participants, for sending transaction statements or for maintaining, supervising or reviewing records maintained by DTC or DTC Participants.

In the event that (1) DTC determines not to continue to act as securities depository for the Bonds or (2) the Issuer determines that the continuation of the Book-Entry System of evidence and transfer of ownership of the Bonds would adversely affect their interests or the interests of the Beneficial Owners of the Bonds, or (3) the Beneficial Owners of all Bonds shall request that such Bonds no longer be held under The Book-Entry System and shall agree to hold the Bonds for investment and not to reoffer the Bonds, the Issuer shall discontinue the Book-Entry System with DTC. If the Issuer fails to identify another qualified securities depository to replace DTC, the Issuer shall cause the Bond Registrar to authenticate and deliver replacement Bonds in the form of fully registered Bonds to each Beneficial Owner.

THE ISSUER AND THE BOND REGISTRAR SHALL NOT HAVE ANY RESPONSIBILITY OR OBLIGATIONS TO ANY DTC PARTICIPANT OR ANY BENEFICIAL OWNER WITH RESPECT TO (i) THE BONDS; (ii) THE ACCURACY OF ANY RECORDS MAINTAINED BY DTC OR ANY DTC PARTICIPANT; (iii) THE

PAYMENT BY DTC OR ANY DTC PARTICIPANT OF ANY AMOUNT DUE TO ANY BENEFICIAL OWNER IN RESPECT OF THE PRINCIPAL OF AND INTEREST ON THE BONDS; (iv) THE DELIVERY OR TIMELINESS OF DELIVERY BY DTC OR ANY DTC PARTICIPANT OF ANY NOTICE DUE TO ANY BENEFICIAL OWNER THAT IS REQUIRED OR PERMITTED UNDER THE TERMS OF THIS RESOLUTION TO BE GIVEN TO BENEFICIAL OWNERS, (v) THE SELECTION OF BENEFICIAL OWNERS TO RECEIVE PAYMENTS IN THE EVENT OF ANY PARTIAL REDEMPTION OF THE BONDS; OR (vi) ANY CONSENT GIVEN OR OTHER ACTION TAKEN BY DTC, OR ITS NOMINEE, CEDE & CO., AS OWNER.

The Bond Registrar is hereby authorized to take such action as may be necessary from time to time to qualify and maintain the Bonds for deposit with DTC, including but not limited to, wire transfers of interest and principal payments with respect to the Bonds, utilization of electronic book entry data received from DTC in place of actual delivery of Bonds and provision of notices with respect to Bonds registered by DTC (or any of its designees identified to the Bond Registrar) by overnight delivery, courier service, telegram, telecopy or other similar means of communication. No such arrangements with DTC may adversely affect the interest of any of the owners of the Bonds, provided, however, that the Bond Registrar shall not be liable with respect to any such arrangements it may make pursuant to this section.

SECTION 12. The Bonds shall be in substantially the following form:

(Form of Bond)

REGISTERED REGISTERED

Number R- $_____

UNITED STATES OF AMERICA
STATE OF TENNESSEE
COUNTIES OF ROBERTSON AND SUMNER

CITY OF WHITE HOUSE

GENERAL OBLIGATION REFUNDING BOND,
SERIES 2008

Interest Rate:	Maturity Date:	Date of Bond:	CUSIP No.:
		_____, 2008	

Registered Owner: CEDE & CO.

Principal Amount:

KNOW ALL MEN BY THESE PRESENTS: That the City of White House in the State of Tennessee (the "Issuer"), for value received hereby promises to pay to the registered owner hereof, hereinabove named, or registered assigns, in the manner hereinafter provided, the principal amount hereinabove set forth on the maturity date hereinabove set forth (or upon earlier redemption as set forth herein), and to pay interest (computed on the basis of a 360-day year of twelve 30-day months) on said principal amount at the annual rate of interest hereinabove set forth from the date hereof until said maturity date or redemption date, said interest being payable on June 1, 2009, and semi-annually thereafter on the first day of June and December in each year until this Bond matures or is redeemed. Both principal hereof and interest hereon are payable in lawful money of the United States of America by check or draft at the corporate trust office of

Regions Bank, Nashville, Tennessee, as bond registrar and paying agent (the "Bond Registrar"). The Bond Registrar shall make all interest payments with respect to this Bond on each interest payment date directly to the registered owner hereof shown on the Bond registration records maintained by the Bond Registrar as of the close of business on the fifteenth day of the month next preceding the interest payment date (the "Regular Record Date") by check or draft mailed to such owner at such owner's address shown on said bond registration records, without, except for final payment, the presentation or surrender of this Bond, and all such payments shall discharge the obligations of the Issuer to the extent of the payments so made. Any such interest not so punctually paid or duly provided for on any interest payment date shall forthwith cease to be payable to the registered owner on the relevant Regular Record Date; and, in lieu thereof, such defaulted interest shall be payable to the person in whose name this Bond is registered at the close of business on the date (the "Special Record Date") for payment of such defaulted interest to be fixed by the Bond Registrar, notice of which shall be given to the owners of the Bonds of the issue of which this Bond is one not less than ten (10) days prior to such Special Record Date. Payment of principal of [and premium, if any,] on this Bond shall be made when due upon presentation and surrender of this Bond to the Bond Registrar.

Except as otherwise provided herein or in the Resolution, as hereinafter defined, this Bond shall be registered in the name of Cede & Co., as nominee of The Depository Trust Company, New York, New York ("DTC"), which will act as securities depository for the Bonds of the series of which this Bond is one. One Bond for each maturity of the Bonds shall be issued to DTC and immobilized in its custody. A book-entry system shall be employed, evidencing ownership of the Bonds in $5,000 denominations, or multiples thereof, with transfers of

beneficial ownership effected on the records of DTC and the DTC Participants, as defined in the Resolution, pursuant to rules and procedures established by DTC. So long as Cede & Co., as nominee for DTC, is the registered owner of the Bonds, the Issuer and the Bond Registrar shall treat Cede & Co., as the only owner of the Bonds for all purposes under the Resolution, including receipt of all principal, premium, if any, and interest on the Bonds, receipt of notices, voting and requesting or taking or not taking, or consenting to, certain actions hereunder. Payments of principal, maturity amounts, interest, and redemption premium, if any, with respect to the Bonds, so long as DTC is the only owner of the Bonds, shall be paid directly to DTC or its nominee, Cede & Co. DTC shall remit such payments to DTC Participants, and such payments thereafter shall be paid by DTC Participants to the Beneficial Owners, as defined in the Resolution. Neither the Issuer nor the Bond Registrar shall be responsible or liable for payment by DTC or DTC Participants, for sending transaction statements or for maintaining, supervising or reviewing records maintained by DTC or DTC Participants. In the event that (1) DTC determines not to continue to act as securities depository for the Bonds or (2) the Issuer determines that the continuation of the book-entry system of evidence and transfer of ownership of the Bonds would adversely affect its interests or the interests of the Beneficial Owners of the Bonds, the Issuer may discontinue the book-entry system with DTC. If the Issuer fails to identify another qualified securities depository to replace DTC, the Issuer shall cause the Bond Registrar to authenticate and deliver replacement Bonds in the form of fully registered Bonds to each Beneficial Owner. Neither the Issuer nor the Bond Registrar shall have any responsibility or obligations to any DTC Participant or any Beneficial Owner with respect to (i) the Bonds; (ii) the accuracy of any records maintained by DTC or any DTC Participant; (iii) the payment by

DTC or any DTC Participant of any amount due to any Beneficial Owner in respect of the principal or maturity amounts of and interest on the Bonds; (iv) the delivery or timeliness of delivery by DTC or any DTC Participant of any notice due to any Beneficial Owner that is required or permitted under the terms of the Resolution to be given to Beneficial Owners, (v) the selection of Beneficial Owners to receive payments in the event of any partial redemption of the Bonds; or (vi) any consent given or other action taken by DTC, or its nominee, Cede & Co., as owner.

If no Term Bonds are issued, the following provision shall be included:

Bonds of the issue of which this Bond is one maturing June 1, 2009 through June 1, 2018 shall mature without option of prior redemption. Bonds of the issue of which this Bond is one maturing June 1, 2019 and thereafter shall be subject to redemption at the option of the Issuer, in whole or in part on June 1, 2018 and at any time thereafter at a price of par plus interest accrued to the redemption date.

If Term Bonds are issued, the following provisions shall be included:

[The Issuer shall redeem Bonds maturing June 1, _____ on the redemption dates set forth below opposite the maturity dates, in aggregate principal amounts equal to the respective dollar amounts set forth below opposite the respective redemption dates at a price of par plus accrued interest thereon to the date of redemption. DTC, as securities depository for the series of Bonds of which this Bond is one, or such Person as shall then be serving as the securities depository for the Bonds, shall determine the interest of each Participant in the Bonds to be redeemed using its procedures generally in use at that time. If DTC, or another securities depository is no longer serving as securities depository for the Bonds, the Bonds to be redeemed

within a maturity shall be selected by the Bond Registrar by lot or such other random manner as the Bond Registrar in its discretion shall select. The dates of redemption and principal amount of Bonds to be redeemed on said dates are as follows:

Stated Maturity	Redemption Date	Principal Amount of Bonds Redeemed

*Final Maturity

At its option, to be exercised on or before the forty-fifth (45th) day next preceding any such redemption date, the Issuer may (i) deliver to the Bond Registrar for cancellation Bonds to be redeemed, in any aggregate principal amount desired, and/or (ii) receive a credit in respect of its redemption obligation under this mandatory redemption provision for any Bonds of the maturity to be redeemed which prior to said date have been purchased or redeemed (otherwise than through the operation of this mandatory sinking fund redemption provision) and canceled by the Bond Registrar and not theretofore applied as a credit against any redemption obligation under this mandatory sinking fund provision. Each Bond so delivered or previously purchased or redeemed shall be credited by the Bond Registrar at 100% of the principal amount thereof on the obligation of the Issuer on such payment date and any excess shall be credited on future redemption obligations in chronological order, and the principal amount of Bonds to be redeemed by operation of this mandatory sinking fund provision shall be accordingly reduced. The Issuer shall on or before the forty-fifth (45th) day next preceding each payment date furnish the Bond Registrar with its certificate indicating whether or not and to what extent the provisions of clauses (i) and (ii) of this subsection are to be availed of with respect to such payment and

confirm that funds for the balance of the next succeeding prescribed payment will be paid on or before the next succeeding payment date.

Notice of call for redemption shall be given by the Bond Registrar not less than thirty (30) nor more than sixty (60) days prior to the date fixed for redemption by sending an appropriate notice to the registered owners of the Bonds to be redeemed by first-class mail, postage prepaid, at the addresses shown on the Bond registration records of the Bond Registrar as of the date of the notice; but neither failure to mail such notice nor any defect in any such notice so mailed shall affect the sufficiency of the proceedings for the redemption of any of the Bonds for which proper notice was given. As long as DTC, or a successor Depository, is the registered owner of the Bonds, all redemption notices shall be mailed by the Bond Registrar to DTC, or such successor Depository, as the registered owner of the Bonds, as and when above provided, and neither the Issuer nor the Bond Registrar shall be responsible for mailing notices of redemption to DTC Participants or Beneficial Owners. Failure of DTC, or any successor Depository, to provide notice to any DTC Participant will not affect the validity of such redemption. From and after any redemption date, all Bonds called for redemption shall cease to bear interest if funds are available at the office of the Bond Registrar for the payment thereof and if notice has been duly provided as set forth in the Resolution, as hereafter defined.]

This Bond is transferable by the registered owner hereof in person or by such owner's legal representative duly authorized in writing at the designated corporate trust office of the Bond Registrar set forth on the front side hereof, but only in the manner, subject to limitations and upon payment of the charges provided in the Resolution, as hereafter defined, and upon surrender and cancellation of this Bond. Upon such transfer a new Bond or Bonds of authorized

denominations of the same maturity and interest rate for the same aggregate principal amount will be issued to the transferee in exchange therefor. The person in whose name this Bond is registered shall be deemed and regarded as the absolute owner thereof for all purposes and neither the Issuer nor the Bond Registrar shall be affected by any notice to the contrary whether or not any payments due on the Bond shall be overdue. Bonds, upon surrender to the Bond Registrar, may, at the option of the registered owner thereof, be exchanged for an equal aggregate principal amount of the Bonds of the same maturity in authorized denomination or denominations, upon the terms set forth in the Resolution. The Bond Registrar shall not be required to transfer or exchange any Bond during the period commencing on a Regular Record Date or Special Record Date and ending on the corresponding interest payment date of such Bond, nor to transfer or exchange any Bond after the notice calling such Bond for redemption has been made, nor during a period following the receipt of instructions from the Issuer to call such Bond for redemption.

This Bond is one of a series of Bonds, all of like tenor and effect, except as to date, number, rate of interest and principal amount, in an aggregate principal amount of $_____ issued for the purpose of providing funds to refund the Issuer's obligations under the Loan Agreement (Series II-F-1) dated as of September 1, 1997, between The Public Building Authority of Sevier County, Tennessee and the Issuer; the Loan Agreement Series II-F-2) dated as of September 1, 1997, between The Public Building Authority of Sevier County, Tennessee and the Issuer; the Loan Agreement ($3,500,000 Series IV-E-5) dated as of October 1, 2000, between The Public Building Authority of Sevier County, Tennessee and the Issuer; and the $2,900,000 Loan Agreement (Series Z-5-C) dated as of October 1, 2007, between The Public

Building Authority of Coffee County, Tennessee and the Issuer, and is issued under and pursuant to and in full compliance with the Constitution and statutes of the State of Tennessee, including Tennessee Code Annotated Section 9-21-101 et seq., pursuant to a resolution (the "Resolution") duly adopted by the Board of Mayor and Aldermen of the Issuer on October 16, 2008. Both the principal of and interest on this Bond are payable from taxes to be levied upon all taxable property in said Issuer without limitation as to rate or amount. A portion of the Bonds are additionally payable from certain net revenues of the sewer system of the Issuer. For the prompt payment of both principal and interest on this Bond, the full faith, credit and resources of the Issuer are hereby irrevocably pledged. Reference is made to the Resolution for a more complete statement of the revenues from which and the conditions under which this Bond is payable and the general covenants and provisions pursuant to which this Bond is issued.

It is hereby certified, recited and declared that all acts, conditions and things required to happen, exist and be performed precedent to and in the issuance of this Bond, in order to make the same a legal, valid and binding obligation of the City of White House, Tennessee, have happened, do exist and have been performed in regular and due time, form and manner as required by law; that due provision has been made for the levy and collection of a direct annual tax, as from time to time may be found necessary, upon all taxable property within the City of White House sufficient to pay the principal and interest hereon as the same become due and payable; and that this Bond and the issue of which it forms a part, together with all other indebtedness of the City of White House, Tennessee, do not exceed any applicable Constitutional or statutory debt limit.

This Bond and the income herefrom are exempt from all state, county, and municipal taxation in the State of Tennessee, except inheritance, transfer and estate taxes and except Tennessee franchise, excise and corporate privilege taxes applicable to certain holders.

If applicable, the following provision shall be added:

[This Bond is a "qualified tax-exempt obligation" designated (or deemed designated) by the Issuer for purposes of Section 265(b)(3)(B) of the Internal Revenue Code of 1986, as amended.]

IN WITNESS WHEREOF, the City of White House, Tennessee, through its Board of Mayor and Aldermen, has caused this Bond to be signed by its Mayor by his manual or facsimile signature and countersigned by the manual or facsimile signature of its City Recorder under the impressed or imprinted seal (or a facsimile thereof) of the Issuer all as of the __ day of _____, 2008.

COUNTERSIGNED:

THE CITY OF WHITE HOUSE, TENNESSEE

(SEAL)

_____
Christie M. Odenwald, City Recorder

_____
John Decker, Mayor

Transferable and payable at the corporate trust office of Regions Bank, Nashville, Tennessee

Date of Registration:

This Bond is one of the issue of Bonds issued pursuant to the Resolution hereinabove described.

Regions Bank, as Bond Registrar

By:_____
Authorized Officer

(Form of Assignment)

For value received, the undersigned hereby sells, assigns and transfers unto

_____ whose address is _____

[_____ (please insert social security number or tax identification

number)], the within mentioned Bond and hereby irrevocably constitutes and appoints

_____, or its successor as Bond Registrar, to transfer the

same on the books kept for registration thereof, with full power of substitution in the premises.

Dated:_____

_____
Registered Owner

Signature Guaranteed:

_____

Notice: Signature(s) must be guaranteed by a member firm of a Medallion Program acceptable to the Bond Registrar.

Notice: The signature must correspond with the name of the registered owner as it appears on the face of the within bond in every particular, without alteration or enlargement or any change whatsoever.

SECTION 13. Both the principal of an interest on the Bonds are payable from taxes to be levied on all taxable property in said Issuer without limitation as to rate and amount. For the prompt payment of such principal and interest, the full faith, credit and resources of the City of White House, Tennessee are hereby irrevocably pledged, and in order to provide for the payment of the Bonds and the interest thereon, there shall be and there is hereby directed to be levied and collected, at the same time and in the same manner as other taxes of the City of White House, Tennessee are levied and collected, a direct tax upon all taxable property within the boundaries of the City of White House, Tennessee, in such amount as may be found necessary each year to provide for the payment of the principal of the Bonds and the interest thereon, as the same mature and become due.

To the extent that proceeds from the Loan Agreement (Series II-F-1) dated as of September 1, 1997 between The Public Building Authority of Sevier County, Tennessee and the Issuer were used to make improvements to the System, the portion of the Bonds allocable to the refunding and/or retirement of the outstanding obligations of the Issuer under such Loan Agreement shall be additionally payable from revenue derived from the operation of the System, including all improvements, extensions or additions thereto, subject only the reasonable and necessary costs of operating, maintaining, repairing and insuring the System and to a prior pledge of such revenues in favor of the Issuer's outstanding Sewer Revenue and Tax Refunding Bond, Series 2002 and its outstanding loan from the State of Tennessee, Revolving Loan Fund.

It shall be the duty of the tax-levying and collecting authorities of the City of White House, Tennessee, in each year while any of the Bonds issued hereunder shall remain outstanding and unpaid, without any further direction or authority to levy and collect the taxes

herein provided for, and the rate of taxation to be levied in each year shall be sufficient, to provide the sums required in each year for the payment of the principal of and interest on the Bonds. Should there be a failure in any year to comply with the requirements of this Section, such failure shall not impair the right of the holders of any of the Bonds in any subsequent year to have adequate taxes levied and collected to meet the obligations of the Bonds herein authorized to be issued, both as to principal and interest. Principal and interest falling due at any time when there are insufficient funds on hand shall be paid from the current funds of the Issuer and reimbursement therefor shall be made out of the taxes hereby provided to be levied when the same shall have been collected. The tax herein provided may be reduced to the extent of direct appropriations from the general funds or other funds, taxes and revenues of the Issuer to the payment of debt service on the Bonds.

SECTION 14. Remedies of Bondholders. Except as herein expressly limited, the registered owners of the Bonds shall have and possess all the rights of action and remedies afforded by the common law, the Constitution and statutes of the State of Tennessee and of the United States of America for the enforcement of payment of such Bonds and the interest thereon and of the pledge of the revenues made hereunder and of the covenants of the Issuer hereunder, including all the benefits and rights granted by Sections 9-21-101 et seq. of the Tennessee Code Annotated.

SECTION 15. The proceeds of the sale of the Bonds shall be applied by the Issuer as follows:

(a) all accrued interest shall be deposited into the Bond Fund of the Issuer and used to pay interest on the Bonds on the first interest payment date following delivery of the Bonds;

(b) an amount, which, together with other legally available funds of the Issuer and earnings on said proceeds and funds, will be sufficient to pay principal, accrued interest and redemption premium, as appropriate, on the Refunded Obligations on a call date not later than ninety (90) days after the issuance of the Bonds shall be immediately paid over to the trustee or trustees of the Refunded Obligations to be held and applied, together with investment proceeds thereof, not later than ninety (90) days after the date of issuance of the Bonds for the payment and retirement of the Refunded Obligations; and

(c) the remainder of the proceeds of the Bonds shall be used to pay the costs of issuance of the Bonds, including, but not limited to, necessary legal, accounting and fiscal expenses, printing, engraving, advertising and similar expenses, bond insurance premiums, swap termination fees, bond rating fees, Bond Registrar fees, administrative and clerical costs, and other necessary miscellaneous expenses incurred in connection with the authorization, issuance and sale and delivery of the Bonds.

SECTION 16. If at the time of the issuance of the Bonds, the Refunded Obligations will not be retired or a valid and timely notice of redemption of the Refunded Obligations is not given in accordance with the resolutions governing the Refunded Obligations, then prior to the issuance of the Bonds notice of the Issuer's intention to refund the Refunded Obligations shall be given either (i) by mail to the owners of the Refunded Obligations at their addresses shown on the bond registration records for the Refunded Obligations, or (ii) by

publication of an appropriate notice one (1) time each in a financial newspaper published in New York, New York, and having a national circulation and in a newspaper having a general circulation in the Issuer. Such notice shall be in a form that meets the requirements of Section 9-21-912 of the Tennessee Code Annotated, as amended. If the issuance of the Bonds does not occur as provided in such notice, notice thereof shall be given in the same manner. The City Recorder is hereby authorized and directed to publish any such notices as may be required in accordance with this Section 16.

SECTION 17. The Issuer recognizes that the purchasers and holders of the Bonds will have accepted them on, and paid therefor a price that reflects, the understanding that interest thereon is exempt from federal income taxation under laws in force on the date of delivery of the Bonds. In this connection, the Issuer agrees that it shall take no action which may render the interest on any of said Bonds subject to federal income taxation and agrees to take all action as may be necessary to comply with the provisions of the Code and the regulations thereunder in order to maintain or assure the tax-exempt status of the Bonds. It is the reasonable expectation of the Governing Body of the Issuer that the proceeds of the Bonds will not be used in a manner which will cause the Bonds to be "arbitrage bonds" within the meaning of Section 148 of the Code, including any lawful regulations promulgated or proposed thereunder (or under corresponding provisions of prior law, if applicable), and to this end the said proceeds of the Bonds and other related funds established for the purposes herein set out, shall be used and spent expeditiously for the purposes described herein. The Governing Body of the Issuer further covenants and represents that in the event it shall be required by Section 148(f) of the Code to pay any investment proceeds of the Bonds to the United States government, it will make such

payments as and when required by Section 148(f) and will take such other actions as shall be necessary or permitted to prevent interest on the Bonds from becoming taxable. The Mayor and the City Recorder or any of them, are authorized and directed to make such certifications in this regard and as is otherwise customary or appropriate in connection with the sale of the Bonds as they shall deem appropriate, and such certifications shall constitute the representations and certifications of the Issuer.

SECTION 18. The Issuer hereby designates the Bonds as "qualified tax-exempt obligations" for purposes of Section 265(b)(3)(B) of the Code if and to the extent the Bonds may be so designated and to the extent not "deemed designated."

SECTION 19. If the Issuer shall pay and discharge the indebtedness evidenced by any of the Bonds in any one or more of the following ways, to wit:

(a) By paying or causing to be paid the principal of and interest on such Bonds as and when the same become due and payable; or

(b) By depositing or causing to be deposited with any trust company or bank whose deposits are insured by the Federal Deposit Insurance Corporation and which has trust powers (the "Agent;" which Agent may be the Bond Registrar), in trust, on or before the date of maturity or redemption, sufficient money or Obligations of the United States of America, the principal of and interest on which, when due and payable, will provide sufficient moneys to pay or redeem such Bonds and to pay premium, if any, and interest thereon when due until the maturity or redemption date (provided, if such Bonds are to be redeemed prior to maturity thereof, proper notice of such redemption shall have been given or adequate provision shall have been made for the giving of such notice) and if the Issuer shall also pay or cause to be paid all other sums

payable hereunder by the Issuer with respect to such Bonds, or make adequate provision therefor, and by resolution of the Governing Body instruct any such Agent to pay amounts when and as required to the Bond Registrar for further payment to the registered owners for the payment of principal of and interest and redemption premiums, if any, on such Bonds when due; or

(c) By delivering such Bonds to the Bond Registrar for cancellation; then and in that case the indebtedness evidenced by such Bonds shall be discharged and satisfied and all covenants, agreements and obligations of the Issuer to the owners of such Bonds shall be fully discharged and satisfied and shall thereupon cease, terminate and become void.

If the Issuer shall pay and discharge the indebtedness evidenced by any of the Bonds in the manner provided in clause (b) above, then the registered owners thereof shall thereafter be entitled only to payment out of the money or Obligations of the United States of America deposited as aforesaid.

Except as otherwise provided in this Section 19, neither the Obligations of the United States of America nor moneys deposited with the Agent pursuant to this Section nor principal or interest payments on any such Obligations of the United States of America shall be withdrawn or used for any purpose other than, and shall be held in trust for, the payment of the principal and premium, if any, and interest on said Bonds; provided, that any cash received from such principal or interest payments on such Obligations of the United States of America deposited with the Agent, (A) to the extent such cash will not be required at any time for such purpose, shall be paid over to the Issuer as received by the Agent and (B) to the extent such cash will be required for such purpose at a later date, shall, to the extent practicable, be reinvested in Obligations of the United States of America maturing at times and in amounts sufficient to pay when due the

principal and premium, if any, and interest to become due on said Bonds on or prior to such redemption date or maturity date thereof, as the case may be, and interest earned from such reinvestments shall be paid over to the Issuer, as received by the Agent.

SECTION 20. Continuing Disclosure. The Issuer hereby covenants and agrees that it will provide annual financial information and material event notices if and as required by Rule 15c2-12 of the Securities Exchange Commission for the Bonds. The Mayor is authorized to execute a continuing disclosure agreement for the benefit of and enforceable by the owners of the Bonds specifying the details of the financial information and material event notices to be provided and the Issuer's obligations relating thereto. Failure of the Issuer to comply with the undertaking herein described and to be detailed in such continuing disclosure agreement, shall not be a default hereunder, but any such failure shall entitle the owner or owners of any of the Bonds to take such actions and to initiate such proceedings as shall be necessary and appropriate to cause the Issuer to comply with its undertaking as set forth herein and in such continuing disclosure agreement, including the remedies of mandamus and specific performance.

SECTION 21. All other actions of officers of the Issuer in conformity with the purposes and intent of this resolution and in furtherance of the issuance and sale of the Bonds are hereby approved and confirmed. The officers of the Issuer are hereby authorized and directed to execute and deliver all certificates and instruments and to take all such further action as may be considered necessary or desirable in connection with the issuance, sale and delivery of the Bonds.

SECTION 22. The provisions of this Resolution shall constitute a contract between the Issuer and the registered owners of the Bonds, and after the issuance of the Bonds, no change,

variation or alteration of any kind in the provisions of this Resolution shall be made in any manner until such time as the Bonds and interest due thereon shall have been paid in full except such changes as shall be required or may be appropriate to assure the validity and/or tax exempt status of the Bonds.

SECTION 23. If any section, paragraph, clause or provision of this Resolution shall be held to be invalid or ineffective for any reason, the remainder of this Resolution shall remain in full force and effect, it being expressly hereby found and declared that the remainder of the Resolution would have been adopted by this Governing Body despite the invalidity of such section, paragraph, clause or provision.

SECTION 24. All orders or resolutions in conflict herewith be and the same are hereby repealed insofar as such conflict exists.

SECTION 25. This resolution shall take effect from and after its approval, the general welfare of the City of White House requiring it.

Passed and approved October 16, 2008.

(SEAL)

_____
John Decker, Mayor

ATTEST:

_____
Christie M. Odenwald, City Recorder

STATE OF TENNESSEE

COUNTIES OF ROBERTSON AND SUMNER

I, Christie Odenwald, hereby certify that I am the duly elected and qualified City Recorder of the City of White House, Tennessee, and as such official I further certify that attached hereto is a true and correct copy of excerpts from the minutes of the meeting of the Board of Mayor and Aldermen of the City of White House held on Thursday, October 16, 2008, insofar as same pertains to the proceedings in connection with the issuance of not-to-exceed $6,150,000 General Obligation Refunding Bonds, Series 2008 of the City of White House, Tennessee.

WITNESS my signature and official seal this the 16th day of October, 2008.

_____
Christie Odenwald, City Recorder
City of White House, Tennessee

(SEAL)

FINANCE AND OTHER BUSINESS . . .

October 3, 2008

MEMORANDUM

To: Board of Mayor & Aldermen

From: John Grubbs – HR Director

Re: City Administrator Annual Review and Increase

Upon authorization of the Board of Mayor and Alderman the following increases to the City Administrator's annual salary will be implemented, based upon review and agreement between the Board of Mayor and Alderman and the City Administrator:

The City Administrator will receive a 2.5% performance increase that will be contributed to the City Administrator's 457 retirement plan. This increase will be retroactively in effect September 28, 2008.

The City Administrator will receive a minimum Cost of Living increase of 3.5% retroactively effective to September 28, 2008.

The US Bureau of Labor Statistics will release the September Consumer Price Index on October 16, 2008. If the September Cost of Living percentage for Urban Wage Earners – South Urban Area is greater than 3.5% per the CPI, the increase will be retroactively adjusted to that amount effective September 28, 2008.

EXTENSION OF TERM OF CONTRACT OF EMPLOYMENT

WHEREAS, the City of White House, hereinafter called "City", entered into on August 9, 2005 a Contract of Employment with Angie D. Carrier, hereinafter called "City Administrator" for a period of four (4) years; and

WHEREAS, the City and City Administrator after mutual negotiations have determined that the term should be extended for an additional four (4) years from the expiration date of the present contract.

NOW THEREFORE, the parties agree as follows:

1. The term of the Employment Contract, as set out in paragraph E of the "City Administrator Contract of Employment" between the City and the City Administrator is extended for a period of four (4) years.

2. The new expiration date of the Contract of Employment is August 8, 2013.

3. All other provisions of the Contract of Employment not herein modified shall remain as therein stated and shall apply to the contract extended hereby.

IN TESTIMONY WHEREOF, witness the signatures of the parties hereto on the day and date first above written.

CITY OF WHITE HOUSE, TENNESSEE

ATTEST:

By: _____
CHRISTIE M. ODENWALD,
CITY RECORDER

By: _____
JOHN DECKER, MAYOR

ACCEPTED AND AGREED TO:

By: _____
ANGIE D. CARRIER

C:\muncipal\City of White House\City Administrator Extension Contract

City of White House
Public Works

Memo

To: Board of Mayor and Alderman

From: Ed Hickman – Director of Public Works

CC: Christie Odenwald

Date: 10/1/2007

Re: Recommended Vendor for Roll off Container service at Public Works

---

On this date, October 1, 2008 I recommend that the Board accept the Bid for Roll off Container service at Public Works as quoted by Allied Waste Services.

$50.00 Rental per container per month.

$175.00 Haul Fee per container.

$33.00 per ton disposal fee.

Fuel and environmental fees will apply.

Average cost per container: Allied Waste Services: $410.55

Waste Management: $545.00

Thank you for your consideration. If you have any questions regarding this matter, you may contact me at 672-0215.

CITY OF WHITE HOUSE

09/16/2008 10:00am
ROLL OFF SANITATION SERVICE

BID# 08-1007PW	WASTE MANAGEMENT	ALLIED WASTE					
ROLL OFF SANITATION SERVICE	1428 ANTIOCH PIKE	700 MURFREESBORO RD					
OPENING: September 16, 2008	ANTIOCH, TN	NASHVILLE, TN 37210					
SPECIFICATIONS:	Unit Cost	Unit Cost	Unit Cost	Unit Cost	Unit Cost	Unit Cost	Unit Cost
ROLL OFF SANITATION SERVICE	$545.00 PER CONTAINER THIS INCLUDES RENTAL, LIFT TONNAGE, FUEL AND ALL FEES	$175.00 HAUL RATE $33.00 PER TON $50.00 PER CONTAINER FUEL SURCHARGE BASED ON U.S. GOV. INDEX					
Delivery							
Totals	$545.00	$225.00 +TONNAGE+FUEL					

MEMORANDUM

TO: Board of Mayor and Aldermen,
Angie Carrier, City Administrator

FROM: Addam McCormick, Planning/Codes

DATE: Thursday October 9, 2008

RE: Decorative Street Lights

Cumberland Electric last year passed a policy that starting January 1, 2009 that local governments would have to maintain existing decorative street light poles. The policy also included that local governments, if desired, would have to regulate all new poles and fixtures constructed. The City advertised bids for street lighting vendors to provide proposals for the city to set up specs based on approved lighting vendor specs. The City received one bid from Rexel Electric. The Rexel proposal is for a 14' fluted aluminum pole with high pressure sodium 175 Watt decorative light fixtures. (See attached diagrams of lighting poles and fixtures.) If the bid is accepted, the City will have a program with Rexel lighting for the city and developers to purchase the lighting fixture at price listed on bid. The price is a scale based on number of fixtures ordered. If the bid is accepted, staff will provided the Planning Commission amendments to the City's Subdivision Regulations to provide street lighting standards including type of pole and fixture, spacing of fixtures, etc.

The City in 2006 purchased street lights under CEMC's program and the light pole and fixture were $ 1,160. The total cost of street light with electric and construction would be about $ 2,000-$ 2,200 per fixture.

CITY OF WHITE HOUSE

09/18/2008 10:00am
DECORATIVE STREET LIGHTS PROGRAM

BID# 08-1006C	REXEL SOUTHERN DOT					
DECORATIVE STREET LIGHTS PROGRAM	299 COWAN STREET					
OPENING: September 18, 2008	NASHVILLE, TN 37213					
SPECIFICATIONS:	Unit Cost	Unit Cost	Unit Cost	Unit Cost	Unit Cost	Unit Cost
BIDS FOR DECORATIVE LIGHT POSTS AND FIXTURES, VENDOR PROVIDES SPECIFICATIONS	$1335.00 PER LIGHT POSTS AND FIXTURE					
Delivery						
Totals	1335.00 PER POLE AND FIXTURE					

Rexel Southern DOT

A Division of Rexel, Inc,
Cindy Evans 205-327-7780 Phone
Terry Ridgeway 256-990-7239 Phone
Mike Rochester 205-229-8808 Phone

ESTIMATE

Date	Estimate #
9/17/2008	TN091808-3

Name / Address
City of White House, TN ATTN: Adam McCormic White House, TN 37188 amccormic@cityofwhitehouse.com

Terms	Due Date	FOB	Project
Net 30 Days	9/17/2008	Factory	Decorative Street Li...

Description	Qty	Rate	Total
CITY OF WHITE HOUSE, TENNESSEE			
Union Metal Stroudsberg 14' Fluted Pole with cast aluminum base and Holophane 175 watt HPS Granville Fixture QTY. 1-5	5	1,606.00	8,030.00
Union Metal Stroudsberg 14' Fluted Pole with cast aluminum base and Holophane 175 watt HPS Granville Fixture QTY 6-19	6	1,467.00	8,802.00
Union Metal Stroudsberg 14' Fluted Pole with cast aluminum base and Holophane 175 watt HPS Granville Fixture QTY 20 OR MORE	20	1,335.00	26,700.00
Poles include Black powder coat finish			
Estimated delivery is 14 weeks after release			

All orders resulting from this quotation should be placed through your local Rexel Southern Branch

Total $43,532.00

Pricing is good 30 days after date of this quotation and 60 days after furnished submittals

Signature _____

Jeff Knight
615-312-7360

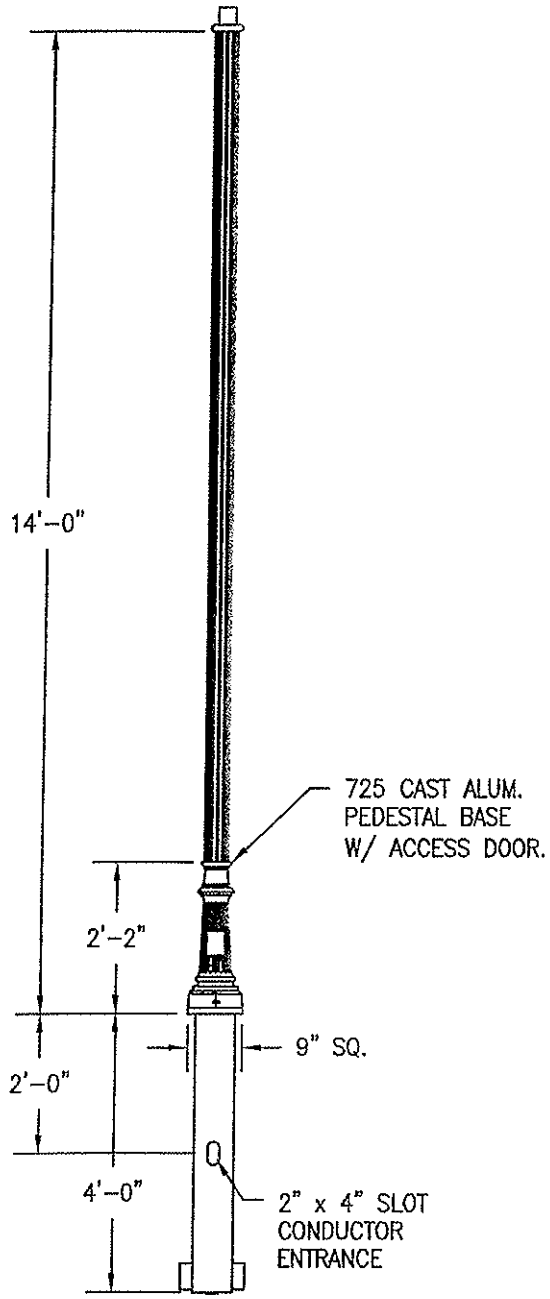

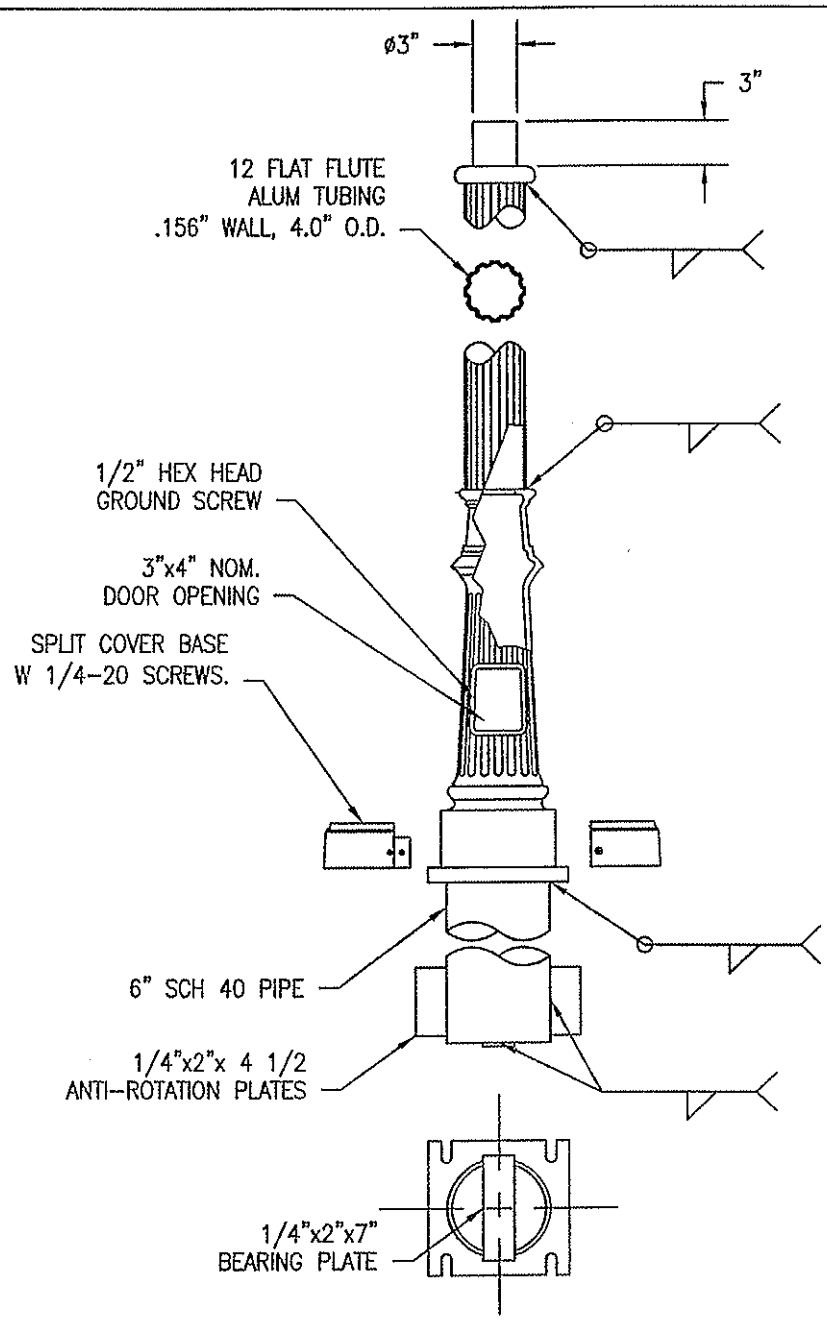

MATERIAL SPECIFICATIONS:
FLUTED SHAFT: 6063
PLATE,BAR,PIPE: 6063, 6061
CASTINGS: A319, A356
HARDWARE: AISI 300 SERIES (18-8)
FINISH: POWDER COATED, COLOR BLACK

STATE: OHIO	REQ# / SO# : NOH17114	REV	DESCRIPTION	DATE	REV BY	CHK BY
PROJECT NAME: AEP COLUMBUS			REVISIONS			

14'-0" ALUMINUM LIGHTING STANDARD, 4" DIA. 12 FLUTE, DIRECT EMBEDDED
AEP CID 53553008 DESIGN NUMBER DPE725-A6-Y1

Union Metal Corporation

This document and the contents herein are proprietary and the property of Union Metal Corporation. This document is not to be, copied, reproduced, or used for any reason except for the purposes which it was issued without the express written consent of Union Metal Corporation. Furthermore Union Metal Corporation reserves the right to recall this document and all copies at any time for any reason.

DESIGNED BY	CHECKED BY	DATE	SCALE	ENG REF
MB	MRB	12/8/06		
ND725-A6			REVISION 0	SHEET 1 OF 1

This document are considered uncontrolled and are to be used for reference only. Those using this document for reference must take all pre-cautions to ensure that this document matches the current revision maintained in digital format, within but a single source and protected by

Maximum weight - 47 lbs
Maximum effective projected area - 1.38 sq. ft.

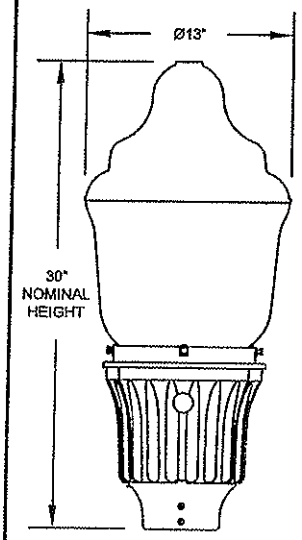

*drawing depicting base model no finial.

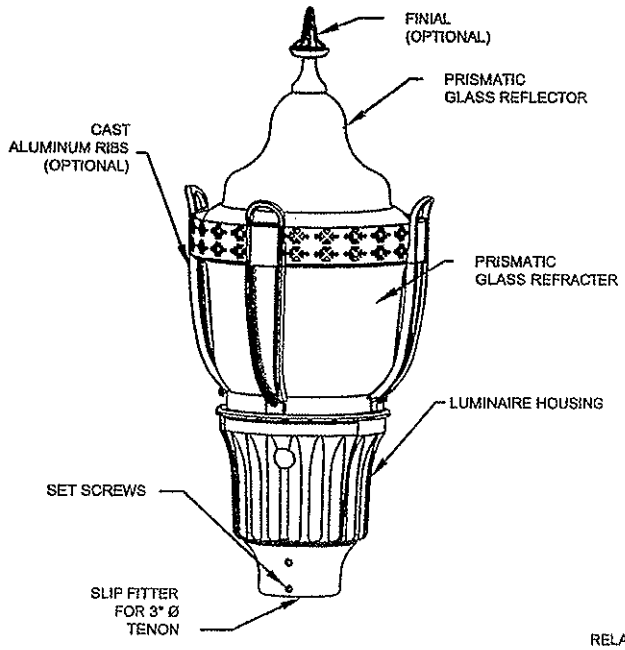

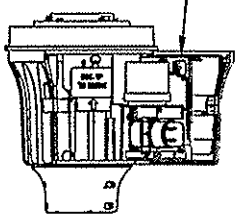

HINGED DOOR BALLAST HOUSING
RELAMP THROUGH BOTTOM OF OPTIC

ORDERING INFORMATION:

GVU

GVU	15AHP	12	N	3	N	F	G

BALLAST TYPE (MOGUL BASE)
050HP = 50W HPS (not available with 347 V)
070HP = 70W HPS
100HP = 100W HPS
15AHP = 150W 55V HPS
175MH = 175W MH

BALLAST TYPE (MEDIUM BASE)
50DHP = 50W HPS (not available with 347 V)
70DHP = 70W HPS
10DHP = 100W HPS
15DHP = 150W 55V HPS
70DMH = 70W MH (not available with 480V)
10DMH = 100W MH (not available with 480V)
15DMH = 150W MH (not available with 480V)
17DMH = 175W MH

VOLTAGE
08 = 208 VOLT (C.U.L.) (not available with 70DMH, 10DMH, 15DMH)
12 = 120 VOLT (UL & C.U.L.)
20 = 208 VOLT
24 = 240 VOLT
27 = 277 VOLT (UL & C.U.L.)
34 = 347 VOLT (C.U.L.)
40 = 240 VOLT (C.U.L.) (not available with 70DMH, 10DMH, 15DMH)
48 = 480 VOLT
MT = MULTITAP (factory 240V) (120, 208, 240, 277 VOLT)
MA = MULTITAP (factory 120V) (120, 208, 240, 277 VOLT)
MB = MULTITAP (factory 208V) (120, 208, 240, 277 VOLT)
MC = MULTITAP (factory 240V) (120, 208, 240, 277 VOLT)
MD = MULTITAP (factory 277V) (120, 208, 240, 277 VOLT)

HOUSING COLOR
A = AS SPECIFIED
B = BLACK
D = DARK GREEN TIGER DRYLAC RAL6005
E = BROWN GREEN TIGER DRYLAC RAL6008
F = DARK GREEN TIGER DRYLAC RAL6009
H = DARK GREEN TIGER DRYLAC RAL6012
N = GREEN
Z = BRONZE

OPTICS
3 = IES TYPE III DISTRIBUTION
4 = IES TYPE IV DISTRIBUTION
5 = IES TYPE V DISTRIBUTION
6 = IES TYPE II DISTRIBUTION LUNAR
7 = IES TYPE III DISTRIBUTION LUNAR
8 = IES TYPE V DISTRIBUTION LUNAR

TRIM
N = NO TRIM
R = RIBS & BAND HINGED TOP
S = SYRACUSE STYLE WITH COVER

FINIAL
B = BALL
C = CLEAR
E = EAGLE
F = FLOWER
N = NONE
P = PAWN
R = CROSS
S = STANDARD

COLOR
A = AS SPECIFIED
B = BLACK
D = DARK GREEN TIGER DRYLAC RAL6005
E = BROWN GREEN TIGER DRYLAC RAL6008
F = DARK GREEN TIGER DRYLAC RAL6009
G = GOLD
H = DARK GREEN TIGER DRYLAC RAL6012
N = GREEN
U = NO TRIM AND CLEAR OR NO FINIAL
Z = BRONZE

OPTIONS

H = NEMA TWISTLOCK PHOTOCONTROL RECEPTACLE ONLY
P = PROTECTED STARTER FOR HPS UNITS ONLY
T = NEMA TWISTLOCK AND PROTECTED STARTER FOR HPS UNITS ONLY.
FCVRX = FULL COVER (INSERT TRIM FINISH, FROM STEP 8 FOR X, ALSO MUST HAVE FINIAL)
MCVRX = MAYFIELD 1/2 COVER (INSERT TRIM FINISH, FROM STEP 8 FOR X, ALSO MUST HAVE FINIAL)
NEMA050HP = NEMA LABEL 50 HPS
NEMA070HP = NEMA LABEL 70 HPS
NEMA100HP = NEMA LABEL 100 HPS
NEMA150HP = NEMA LABEL 150 HPS
NEMA070MH = NEMA LABEL 70 MH
NEMA100MH = NEMA LABEL 100 MH
NEMA150MH = NEMA LABEL 150 MH
NEMA175MH = NEMA LABEL 175 MH
PCTWSTL120 = DTL TWISTLOCK PHOTOCONTROL 120 VOLT
PCTWSTL12202427 = DTL TWISTLOCK PHOTOCONTROL 120-277 VOLT
PCTWSTL480 = DTL TWISTLOCK PHOTOCONTROL 480 VOLT
PCTWSTSHRTCAP = SHORTING CAP
LEADS1.5FT10GA = 1.5 FEET OF PREWIRED LEADS
LEADS3FT10GA = 3 FEET OF PREWIRED LEADS
LEADS10FT10GA = 10 FEET OF PREWIRED LEADS
LEADS20FT10GA = 20 FEET OF PREWIRED LEADS
LEADS25FT10GA = 25 FEET OF PREWIRED LEADS
LEADS30FT10GA = 30 FEET OF PREWIRED LEADS

ACCESSORIES

LAMP = SHIP APPROPRIATE LAMP AS LINE ITEM. SEE LAMP SHEET
GVBANDX = DECORATIVE BAND (INSERT TRIM FINISH FOR X)
IG-5 = PLUG-IN REPLACEMENT STARTER FOR HPS UNITS
IG-6 = PLUG-IN REPLACEMENT PROTECTED STARTER FOR HPS UNITS
IG-7 = PLUG-IN REPLACEMENT STARTER FOR 70/10/15DMH UNITS

Utility Granville® Series Postlite

DECORATIVE OUTDOOR

HOLOPHANE® LEADER IN LIGHTING SOLUTIONS
An Acuity Brands Company

THIS DRAWING, WHEN APPROVED, SHALL BECOME THE COMPLETE SPECIFICATION FOR THE MATERIAL TO BE FURNISHED BY HOLOPHANE ON THE ORDER NOTED ABOVE. A UNIT OF SIMILAR DESIGN MAY BE SUPPLIED, BUT ONLY AFTER APPROVAL BY THE CUSTOMER IN WRITING. ON POLE ORDERS AN ANCHOR BOLT TEMPLATE PRINT WILL BE SUPPLIED WITH EACH ANCHOR BOLT ORDER TO MATCH THE POLE PROVIDED. THIS PRINT IS THE PROPERTY OF HOLOPHANE AND IS LOANED SUBJECT TO RETURN UPON DEMAND AND UPON EXPRESS AGREEMENT THAT IT WILL NOT BE USED DIRECTLY OR INDIRECTLY IN CONNECTION WITH MATERIAL FURNISHED BY HOLOPHANE.

ORDER #:
TYPE:
DRAWN: JCH
DATE: 4/29/08
DWG #: LUM_GVU

White House Police Department

John W. Decker Police Facility
303 North Palmers Chapel Rd.
White House, Tennessee 37188
E-mail: whpd@cityofwhitehouse.com
615-672-4903
Fax 615-672-4915

MEMORANDUM

To: The Board of Mayor and Alderman
From: Gerald O. Herman, Chief of Police
Date: October 8, 2008
Re: Request for Purchase Approval of a Records Management System

---

The City of White House received and opened sealed bids on September 15, 2008, at City Hall pertaining to the purchase of a Records Management System for the White House Police Department.

The White House Police Department is recommending the purchase of the Records Management System from M & M Microsystems for the price of $17,070. The package will include the option of 5 user licenses.

Thank you for your consideration in this matter.

CITY OF WHITE HOUSE

0915/2008 10:00am
Records Management Software

RFP Records Management System for Police Department OPENING: September 15, 2008	M&M Micro Systems 1905 High Park Circle Maryville, TN 37803	Tyler Technologies 5808 4th St Lubbock, TX 79416					
SPECIFICATIONS:	Unit Cost	Unit Cost	Unit Cost	Unit Cost	Unit Cost	Unit Cost	Unit Cost
Records Management System for Police Department, must integrate with TRIS and TBI--TIBRS Guidelines and Tennessee Dept of Safety TITAN Project	$16,370.00	$25,025.00					
optional	$700.00 for 5-user license						
Delivery							
Totals	$16,370.00	$25,025.00					

MEMO

TO: Board of Mayor and Alderman

FROM: Ron Bailey, City Engineer

DATE: October 16, 2008

SUBJECT: Street Acceptance

The Engineering Department has conducted a formal inspection of the roadway and drainage improvements associated with:

White House Crossings – Wilkinson Lane Improvements .

All roadway and drainage improvements in this phase are installed and in an acceptable condition. Any off-site roadway and drainage improvements associated with this phase are also installed and in an acceptable condition. The total value of these assets is estimated to be **$ 750,000 .** The Engineering Department recommends acceptance of the roadway improvements listed above with the following conditions:

1. Provide a **Maintenance Bond** for one year in the amount of **$ 135,000 .**
2. Correct all issues before the Maintenance Bond expires.

Formal Request for Street Acceptance

Date: September 17, 2008

Subdivision / Phase: **White House Crossings**

Dedicated by: Mark Tarver

This letter is being submitted to the City of White House Planning Commission and the Board of Mayor and Alderman for acceptance of the rights-of-way and roadway improvements listed below:

Street Name: **Wilkinson Lane**

Beginning at: Hwy 76
Ending at: Walmart rear property line

Length (ft)	Width (ft)	ROW width (ft)	Curb (lf)	Sidewalk (lf)
1545	varies	varies	2135	1365

Costs:	Unit	Quantity	Rate	**Cost**
Land	Acre	1.13	116,540	$131,690
Roadbed:				
Subgrade	SY	4964	0.75	$3,723
Stone Base	Ton	2184	24.90	$54,381
Binder	Ton	2048	79.05	$161,894
Surface:				
Tack Coat	Gallon	197	5.90	$1,162
Final Overlay	Ton	162	114	$18,468
Storm Drainage	LS	1		$55,985
Sidewalks	LF	1365	24	$32,760
Curb or curb and gutter	LF	2135	21	$44,835
Signals	LS	1		$228,102
Signage / Pavement Markings	LS	1		$17,000
			Total Cost:	**$750,000**

WHITE HOUSE DEVELOPMENT CORPORATION

September 18, 2008

City of White House
Attention: Mr. Addam McCormick
Planning Director
105 College Street
White House, TN 37188

Dear Addam,

I am writing to ask the Board of Mayor and Aldermen to accept the roadway improvements on Wilkinson Lane on behalf of the City of White House.

Please let me know if you have any questions. Thank you.

Sincerely,

Mark Tarver, President

cc: Ron Bailey

5409 B Kingston Pike • Knoxville, TN 37919 • 865.584.0788

MEMO

DATE: October 7, 2008

TO: Board of Mayor and Alderman
Angie Carrier, City Administrator

FROM: Bill K. Crusenberry, Director of Wastewater

RE: Take home vehicle

As you presently know all the Technicians in the wastewater department take part in an on-call rotation to respond to after hour service requests. Due to the hazards of wastewater these requests can not wait till normal business hours. In order to create a positive working environment and prevent burn out its best to include as many as possible in to the rotation thus increasing the amount of time between each on-call period.

I am requesting that Jeremy Matthews, who lives outside the City be allowed to take home a service truck only for the duration of his on-call period. Please see the attached form. I would be happy to answer any questions you may have.

Thank you.

Take-Home Vehicle Assignment
Authorization Request

Employee Name: Jeremy Matthew Street Address: 301 Lee Avenue
Position Title: Tech II City of Residence: Portland, TN
Vehicle Number: _____ Daily Commute Miles: 40

Number of emergency call-outs in previous year: July1-December 31 _____ January 1-June 30 _____

Pursuant to White House Resolution 03-07, requests for authorization of take-home vehicles must meet one of the following criteria. Please check the appropriate box.

☐ **Emergency Response:** The employee has primary responsibility for responding to emergency situations which require immediate response to protect life or property ***and*** the employee is called out at least 4 times per quarter. A "call-out" is defined as a directive to an employee to report to a work site during off duty time. Documentation listing the number and nature of call-outs for the previous six months must be attached to this request.

☑ **On-Call:** Employees designated to respond to calls of City business after routine business hours for the continuation of City services.

☐ **Department Head:** As defined in Resolution 03-07.

NOTE: Take-home vehicle privileges will only be extended to employees living within the city limits of White House. Variances may only be granted by the Board of Mayor and Aldermen through petition of the City Administrator.

Any accident in a City take-home vehicle shall be reported to the employee's Department Head immediately. Employees are responsible for abiding by all traffic laws, tickets and/or citations received while driving the take-home vehicle.

Employees shall not operate a City take-home vehicle while under the influence of alcohol, illegal substances, medications (prescription or over the counter) which could affect the employees' ability to operate the vehicle safely. Smoking is not allowed in city owned vehicles. Vehicles shall be driven for City business only. Non-employees are not allowed to ride in city owned vehicles.

Note: **A City owned take-home vehicle is a fringe benefit that generates a tax liability. If authorization is granted for a take-home vehicle, the employee must complete the proper paperwork for IRS compliance. (Public safety employees are exempt.)**

Jeremy Matthew — 10/10/08
Requestor's Signature — Date

Bill K. Gardner — 10/10/08
Department Head Signature — Date

_____ — _____
City Administrator Signature — Date

Revised, 5.10.07

OTHER INFORMATION . . .

October 9, 2008

MEMORANDUM

To: Board of Mayor & Aldermen

From: John Grubbs – HR Director

Re: Employee Recognition – Wastewater Treatment - Inspection

Distinguishing features of work:

Wastewater Treatment Plant Operator*: Receives or takes samples from the wastewater lagoons, clarifiers, oxidation ditches, streams, etc. and performs laboratory tests such as for: ammonia, pH, dissolved oxygen, CBOD, Suspended Solids, Solubles, Alkalinity, Fecal Coliform, E-Coli, Settable Solids, Mixed Liquor Suspended Solids and other tests required by the NPDES Permit or any analysis required to maintain the integrity of the treatment process before discharge into a receiving stream. Maintains the laboratory and all laboratory equipment in good working order.*

Wastewater Inspector: *Inspect installation of all sewer services (low pressure, gravity and vacuum). Assist Wastewater Director with the as-built collection of all new sewer facilities and help ensure the comprehensive map is kept up dated. Assist Director and City Engineer in field collection/verifying information related to construction, development, hydraulic modeling, and collection system and wastewater treatment operations. Ensure sewer lines are installed per City specifications.*

Often not thought of on a daily basis by the average citizen, our Wastewater Treatment Plant is a very crucial aspect of maintaining a clean and sanitary environment for our population to thrive in. We have a Chief Wastewater Treatment Plant Operator and Wastewater Inspector who function within the Treatment operation.

Over the last month, there was fairly low volume on the Inspection side of the Plant operation, due somewhat to a slow down in the construction industry with only 14 inspections performed. When not performing inspections our Inspector provides assistance and support to the Chief Plant Operator. Together, the Chief Plant Operator and Inspector, analyzed, treated and maintained the service for just over 16.5 million gallons of treated wastewater.

These persons who serve behind the scenes without fanfare are typical of the public servant who maintains and improves our City as it thrives and grows.

Wastewater Treatment Personnel

Robert Allen	Chief Wastewater Plant Operator
David Smith	Wastewater Inspector

STATE OF TENNESSEE
COMPTROLLER OF THE TREASURY
DIVISION OF LOCAL FINANCE
SUITE 1700 JAMES K. POLK STATE OFFICE BUILDING
505 DEADERICK STREET
NASHVILLE, TENNESSEE 37243-0274
PHONE (615) 401-7976
FAX (615) 532-5232

August 27, 2008

Honorable John Decker, Mayor
City of White House
105 College Street
White House, Tennessee 37188

Dear Mayor Decker:

This will acknowledge receipt of a certified copy of the City of White House 2008-2009 fiscal year budget.

We have reviewed the budget and have determined that projected revenues and other available funds are sufficient to meet anticipated expenditures. Our review of the budget is based solely on the information we have received and is for the purpose of determining that the budget, as presented to this office, appears to be balanced. With regard to programs included in the budget such as education, roads, and corrections, we have not made any attempt to determine that the local government has complied with specific program statutes or guidelines, or with any financing requirements prescribed by any state or federal agency. A property tax rate may be included in this budget, and we would recommend that local government officials be certain that all program requirements have been met before initiating the tax collection process.

This letter constitutes approval by this office for the City of White House 2008-2009 fiscal year budget as adopted by the Governing Body.

Sincerely,

David H. Bowling, Director

DHB:laa

Cc: Ms. Charlotte Soporowski

Angie Carrier

From: Tennesse Municipal League [tmlmail@tml1.org]
Sent: Tuesday, September 16, 2008 1:49 PM
To: Angie Carrier
Subject: TML Policy Committee Results

If you're having trouble viewing this email, you may see it online.

send this to a friend

TENNESSEE MUNICIPAL LEAGUE

Memo

To: TML Policy Participants
From: Margaret Mahery, Executive Director
Re: TML Policy Committee
Date: September 16, 2008

Listed below are the voting results from last week's Policy Committee meeting. The issues will next be submitted to the Legislative Committee and then to the TML Board of Directors for final consideration and direction, which will establish our Legislative Agenda for the upcoming session.

Thank you for your participation in the policy process, and feel free to contact our offices if you need additional information.

Review the Policy Committee Results

*The voting percentages are based on the amount who voted "yes"
**The voting points are based on the numbers used to rank issues: ex. the number 1 was used to say an issue is "most important/relevant", while the 15 was used to say an issue was "least important/relevant". So a higher score means an issue was ranked lower.

Tennessee Municipal League | 226 Capital Boulevard | Nashville, TN 37219

This email was sent to acarrier@cityofwhitehouse.com. To ensure that you continue receiving our emails, please add us to your address book or safe list.

manage your preferences | **opt out** using TrueRemove®.

Got this as a forward? **Sign up** to receive our future emails.

powered by emma

Technical Corrections

Voting Percentage	ISSUE SUMMARY
96%	Kirk Bednar, Brentwood - Clarifying General Law Manager Commission Charter Relative to Ordinance Passage
96%	City of Cleveland - Cities using distress warrants to seize property to satisfy delinquent taxes must use a sheriff's deputy, or have a police officer sworn in as special deputy, when serving distress warrant. The statute creating the procedure is antiquated.
96%	Mark Johnson, Alcoa - Unifying the number of special censuses permitted

TML Issues from the 105th General Assembly (not enacted)

Voting Percentage	ISSUE SUMMARY
100%	5% Commission on Collection of State Taxes
93%	Increase Single Article Cap
85%	Firefighter Educational Incentive Pay
81%	Addressing Infrastructure Needs
37%	Reducing Nonconforming Use Time Period
26%	Off-Site Sign Expansion
19%	Nuisance Abatement

New Proposals

Final Ranking	ISSUE SUMMARY	Voting Results
1	Honna Rogers, Signal Mountain - Increase maximum daily fine municipalities are allowed to levy	Total Points: 79
2	Sally Oglesby, Crossville - Increase in Recording Fees for business Licenses to Match County Fee -	Total Points: 126
3	Sally Oglesby, Crossville - Business Tax Recording Fee for Businesses Re-locating	Total Points: 154
4	Michael Walker, Brentwood - The Streamlined Traffic Signal Management Act	Total Points: 156
5	City of Chattanooga, - Adding collection costs to court debt. Municipal Courts need legislative authority to add the costs of collection to delinquent cases, so that cities may be reimbursed in full if a collection agency is used	Total Points: 163

New Proposals

Final Ranking	ISSUE SUMMARY	Voting Results
6	Royce Davenport, McMinnville - Allow public notice to be posted on an official government website	Total Points: 167
7	Mark Johnson, Alcoa - Permission for Utility Extension	Total Points: 168
8	Russell Lee, Finance Director, Lebanon - The state, but not municipalities, is presently authorized to use the "reverse auction" form of municipal purchasing	Total Points: 170
9	Kevin Helms, Fayetteville - Criteria for a Referendum on Metro Government	Total Points: 196
10	Royce Davenport, McMinnville - Two elected officials should be allowed to talk without violating open meetings law	Total Points: 212
11	Susan Stephenson, Columbia - Municipalities should be empowered to initiate and enforce Adequate Facilities Fees and/or Impact Fees	Total Points: 236
12	Susan Stephenson, Columbia - "Rental Inspection Program" (currently, there are 2 pilot programs in TN Nashville and Oak Ridge)	Total Points: 259
13	Rick Gregory, Goodlettsville - PC 1008 (HB649) places a new requirement on planning commissions for review of replacement or installation of security gates or barriers	Total Points: 270
14	Susan Stephenson, Columbia - "Planning Commission serves solely as an Advisory Body to Chief Legislative Body (City Council) on all city matters they review"	Total Points: 316
15	Susan Stephenson, Columbia - "Board & Commission Nominations and Term Limits"	Total Points: 328

Previous initiatives from 105th General Assembly

A Increase Single Article Cap

B 5% Commission on Collection of State Taxes

C Mandatory Firefighter Training & Pay Supplement

D Nuisance Abatement

E Off-Site Sign Expansion

F Reducing Nonconforming Use Time Period

G Addressing Infrastructure Needs

Increase Single Article Cap

Background

In 1963, the General Assembly enacted the "Local Option Revenue Act" which established the local option sales tax and set the maximum local tax rate at one-third of the state sales tax rate not to exceed $5 in local taxes on a single article.

In 1968, Chapter No. 488 increased the maximum local option sales tax rate to one-half of the state rate and increased the maximum local tax on a single article to $7.50.

In 1983, the General Assembly enacted Public Chapter No. 278 which increased the maximum local tax that could be collected on a single article to $667. In addition, this legislation provided for an additional $443 increase in the amount of local tax that could be collected on a single article phased-in over a two-year-period as follows: fiscal year 1984 the single article cap was increased to $889; fiscal year 1985 the single article cap was increased to $1,100.

In 1990, the cap on the amount of local sales tax that could be collected on a single article was again increased from $1,100 to its current level of $1,600.

However, in July of 2002, the Tennessee General Assembly enacted a tax package (Public Chapter 856 of the Acts of 2002) that was anticipated to raise $933 million in new revenue and bring recurring revenues in line with recurring expenditures for the first time in years. As a result of the 2002 amendments to T.C.A. 67-6-702, the state now levies an additional 2.75 percent tax (total state sales tax of 9.75 %) on each dollar of a single article in excess of $1,600 up to a maximum state cap of $3,200.

Proposed Legislation

TML is seeking approval of legislation which eliminates the state imposed 2.75 percent tax rate on purchases of single articles between $1,600 and $3,200. Additionally, the legislation increases the local single article cap from $1,600 to $3,200

Anticipated Benefits to Municipalities

This proposed legislation will effectively allow local governments to collect local sales and use taxes on the first $3,200 of a single article. Based on state revenue figures from fiscal year 2006, the proposed change will produce approximately $50 million in additional revenues for municipalities and counties annually.

Problem

Over a seven-year period beginning in 1983 and ending in 1990, the single article cap was increased four times providing for a total increase of $933. These periodic increases in the cap helped to mitigate the effects of inflation on local revenues.

However, over the last 16 years, the single article cap on the local option sales tax has not been increased by so much as a penny. Consequently, inflation has caused the percent of local revenues derived from this tax to decline dramatically; thereby limiting the efficacy of a principal source of revenues currently available to local governments.

Therefore, the 2002 amendments present a double whammy to local governments in that they limit local governments' ability to secure future increases in the single article cap to combat the effects of inflation on revenues and restrict a principle source of local revenues. As a result, local officials are forced to look elsewhere to satisfy citizens' ever increasing demand for services.

5 % Commission

Background

T.C.A. 67-4-704 authorizes municipalities and counties to levy a local business tax. The contents of this statute can be summarized as follows:

- Authorizes municipalities and cities to levy a tax on the gross receipts of local retail and wholesale businesses.
- Establishes a tax schedule that provides the maximum tax rate allowed for retail and wholesale businesses in five different classifications.
- Requires the municipality or county to remit 15 percent of the local revenues collected pursuant to the statute to the state.

In July of 2002, the Tennessee General Assembly enacted a tax package (Public Chapter 856 of the Acts of 2002) that was anticipated to raise $933 million in new revenue and bring recurring revenues in line with recurring expenditures for the first time in years. The Act included a provision which significantly altered the local business tax. Specifically, the Act made the following changes:

- Preserved the requirement that the municipality or county remit 15 percent of the local revenues collected pursuant to the statute to the state.
- Created a "state business tax" by mandating an across-the-board increase in the maximum tax rate provided for each classification by 50 percent.
- Required the municipality or county to remit 100 percent of the revenues collected that were attributable to the new "state business tax" (50 percent increase in the maximum rates) to the state.
- Prohibited those municipalities and counties that levied a local business tax in place in 2002 from reducing their tax rates at a future date.
- Allowed those cities that adopted tax rates at a fraction of the maximum, prior to the 2002 amendments, to increase their rates at a future date; provided the increase did not exceed the new maximum rates established in the Act.
- Allowed those municipalities or counties that had elected not to levy a local business tax to do so at a later date; provided the new tax did not exceed the new maximum rates established in the Act.

Proposed Legislation

Amend T.C.A. 6-56-1 to allow municipalities to charge a commission for collecting state taxes and remitting those revenues to the state. This authority would be identical to the authority extended to the counties in Section 8-21-701 (55)

Anticipated Benefits to Municipalities

Since the inception of the "state business tax" in 2002, municipalities have had to absorb all costs associated with the collection, processing and remittance of the state's portion of the local business tax.

If the statutes were amended to allow municipalities to charge five percent for performing tasks associated with the "state business tax," then municipalities would be able to recoup some of the costs incurred as a result of this state mandate; thereby eliminating the current inequity. Last year, alone, Tennessee's cities were denied an additional $2.8 million in funds they would have received had they, like the counties, been authorized a five percent commission for collecting and remitting the state's portion of the local business tax.

Problem

As a result of the 2002 amendments (Public Chapter 856) to T.C.A. 67-4-704, municipalities and counties must collect, process, and remit the statutorily mandated portions of the revenues derived from the local business tax to the state. Consequently, the statute requires municipalities and counties to expend additional man hours and resources to perform the tasks associated with the collection and remittance of the state's portion of the tax.

T.C.A. 8-21-701 seems to acknowledge the likelihood that local governments will incur additional expenses and provides a mechanism whereby counties may recoup a portion of their costs associated with the mandatory collection and remittance of state taxes and fees. Specifically, 8-21-701 (55) authorizes counties to demand and receive five percent of the total amount collected and paid over to the state to compensate for the costs incurred collecting and remitting state taxes or fees. Therefore, counties are able to recoup a portion of the costs incurred collecting, processing and remitting the state's portion of the local business tax. However, no such allowance is made for municipalities under Tennessee's statutes.

Municipalities have to absorb all the costs associated with the state's portion of the local business tax, while counties are allowed a commission to offset the costs of performing the same state-mandated tasks. Clearly, the absence of comparable legislation authorizing municipalities to levy a five percent commission has led to a disparity between the state's treatment of municipalities and counties in this area.

Mandatory Fire Training & Pay Suplement

Background

A July 2006 survey conducted by the state fire marshal indicates there are approximately 34,000 firefighters in Tennessee. Of these, 7,073, or about 21 percent, are full-time, career firefighters, while the remaining 26,900 firefighters in the state are either part-time or volunteers.

Full-time firefighters in cities participating in the Firefighter Commission program are required, by law, to complete 400 hours of training at the state's fire training academy or an approved equivalent, during their first two years of service – 80 hours of basic training and 320 hours of advanced training. Full-time firefighters continue to draw their full salary during training while also receiving an additional $450 per year as state supplemental pay, for completing this training. There are a few cities that have elected not to participate in the Firefighter Commission program and therefore may do "on the job training" but do not get the pay supplement from the State of Tennessee.

However, there is no such requirement for the part-time and volunteer firefighters that account for 80 percent of the state's firefighters. In fact, Tennessee has no minimum training requirement for volunteer or part-time firefighters. This truth, along with the fact that volunteer firefighters are ineligible for supplemental pay and must take time off and may have to surrender some of their regular wages as well as personal time to attend training, helps to explain the fact that only 4,000 of the 26,900 part-time and volunteer firefighters have received any formal training, according to records from the Tennessee Firefighter Commission.

Perhaps, even more troubling is that with an attrition rate of 20% per year with recruitment not keeping up resulting in a net loss of 15% of volunteer firefighter in the past 10 years, according to the National Volunteer Fire Council, among the ranks of part-time and volunteer firefighters, it is estimated that only 2,500 of the 4,000 part-time and volunteer firefighters that received formal training are currently serving with a fire department in Tennessee.

Problem

The State of Tennessee has the second highest death rate from fire in the United States. Many have suggested there is a direct correlation between the death rate from fire and the fact that a very large percentage of Tennessee firefighters are either untrained or under-trained.

In the event of a catastrophic experience in Tennessee, man-made or natural, current response scenarios assume a significant mobilization of volunteer, part-time and career firefighters in response to such disasters. Most of these volunteer and part-time firefighters (and a small percentage of career firefighters) do not possess the basic skills necessary to perform under the everyday conditions that exist in their home communities; much less the skills required during a major disaster.

Proposed Legislation

TML, along with the Tennessee Fire Chiefs Association, is seeking approval of legislation establishing a minimum training requirement of 80 hours (64 hours of classroom training within their department and an additional 16 hours during one weekend of live fire training at the State Fire and Codes Academy or one of the other locally operated live-burn training centers for firefighters in Tennessee. Under our proposed legislation, all firefighters, whether career or volunteer, are required to complete 80 hours of basic training before they are removed from probationary firefighter status.

To ensure compliance with the proposed minimum training requirement, the legislation directs that the state fund the costs associated with training 1,500 volunteer firefighters, per year, at the Tennessee Fire and Codes Academy at a cost of $200 per firefighter, according to estimates provides by the staff at the Academy. Under the bill, municipalities will continue to pay the costs associated with the training of any career firefighters they employ.

In addition, the legislation deems volunteer and part-time firefighters eligible to receive state-funded supplemental payments of $1,000 at the following intervals:

- Upon certification as a FF1.
- Upon certification as a FF2
- Upon certification as an Apparatus Operator
- Upon certification as an Instructor
- Upon certification as a Fire Officer

Anticipated Benefits to Municipalities

There is an expectation that when a career firefighter is hired, the employer should provide that individual with at least the basic skills needed to perform their job. Similar expectations are present for volunteer firefighters. These basic training skills are needed just to begin to reduce the fire death rate in Tennessee.

This legislation allows Tennessee's cities and counties to begin to address the number of untrained and under-trained firefighters by providing a basic firefighter training package at no cost to the volunteer and part-time firefighter.

Nuisance Abatement

Background

Municipal governments employ ordinances as a means of protecting the health, safety and welfare of their citizens. These ordinances give local officials "police power" to compel or prohibit certain conduct by all persons, or classes of persons, within their jurisdiction in order to maintain a high, constant quality and standard of life.

Examples include the regulation of animals and lewd behavior. Additionally, ordinances adopted by a municipality that are intended to prevent the occupancy of unsafe and unfit structures, such as building codes, fire codes, housing codes, etc., are also examples of local nuisance measures designed to protect the health, safety, and welfare of citizens.

Problem

Tennessee's "Abatement of Nuisances" law provides for the seizure and forfeiture of personal property and authorizes injunctions for the purpose of ordering defendants to immediately cease activities that create a nuisance. T.C.A. 29-3-101(a)(2) defines "nuisance," but the definition does not include the violation of city codes put in place to protect the health and safety of its citizens.

State statutes governing the abatement of nuisances are vague and, therefore, it is uncertain whether the statutes allow nuisance actions to be brought by cities to enforce violations of municipal codes. Consequently, it is unclear whether municipalities have the authority to remedy local building and fire code violations under the state's nuisance laws.

Proposed Legislation

TML is seeking approval of legislation that further defines "nuisance" under T.C.A. 29-3-101 (a)(2) to include the violation of any building, electrical, housing, or fire code, or such similar codes, enacted by local governments to protect the public health, safety, and welfare of citizens."

Anticipated Benefits to Municipalities

Clarifying that the state's "Abatement of Nuisance" law covers violations of municipal codes will provide cities clear authority to seek injunctive relief, under the state nuisance abatement law, for the purpose of enforcing code violations; thereby allowing municipalities to better protect the health and safety of citizens.

Off-Site Sign Expansion

Background

T.C.A. 13-7-208 (h) governs off-site signs, which are signs that advertise or give directions to any business, product, service, attraction, or any other purpose or interest, other than the site where the sign is positioned. The courts have determined that off-site signs in use prior to current zoning ordinances are considered nonconforming uses and are not subject to the height, bulk, and setback requirements of municipal zoning codes. Further, the laws relating to the expansion of off-site signs are vague and incomplete, and do not limit the number of expansions such signs may undergo. Consequently, the enforcement of municipal ordinances, as they relate to off-site signs, has become difficult, time consuming, and legally challenging.

Problem

Nonconforming use ordinances are put in place to maintain the health, safety, and welfare of the community while preserving private property rights; however, owners of off-site signs have exploited the ambiguity in the statute and the court created loophole to convert small directional signs into full-scale billboards. This practice allows off-site sign owners to circumvent current zoning laws, creating a number of concerns for cities. As small signs are replaced by larger signs, motorists' and pedestrians' views are obstructed, alternative uses for the land are displaced, the aesthetics of the community are harmed, and property values are reduced.

Since the law does not limit the number of times owners may increase the size of off-site signs, municipalities are not able to uniformly enforce zoning and implementing any land use plan is nearly impossible.

Proposed Legislation

TML will introduce legislation that prohibits the expansion of an off-site sign smaller than 6'2" x 12'2". In addition, the legislation will specify that any off-site sign larger than 6'2" x 12'2" can expand one time and, then, only to the next larger dimensional category. For example, an owner of an off-site sign smaller than an 8-sheet poster would not be able to expand the sign; but an owner may increase a 30-sheet poster to a standard bulletin, but no larger (see chart below).

Category	Dimensions
8-sheet poster	5'4" to 6'2" x 11'4" to 12'2"
30-sheet poster	12'3" x 24'6"
Standard bulletin	10' to 14' x 36' to 48'
Super bulletin	16' to 20' x 60'

Anticipated Benefits to Municipalities

Prohibiting the expansion of small off-site signs and specifying the number of times an off-site sign may expand will prevent sign owners from exploiting the loophole, enable cities to uniformly enforce zoning laws, and fully implement land use plans. Additionally, closing the loophole will protect property values within the community and provide a safe transportation environment.

Reducing Nonconforming Use Time Period

Background

Industrial, commercial, and other business establishments which are inconsistent with current zoning ordinances, but were in use prior to the adoption of such ordinances, are classified as nonconforming uses and are afforded certain protections under T.C.A. 13-7-208(g). The statutes provide the owners of such properties the ability to cease operation of the nonconforming use and then resume operation of any time during a period of thirty (30) consecutive months without losing the statutory protections.

Problem

Municipalities establish land use plans by encouraging the development of desirable residential, commercial, and industrial areas with appropriate groupings of compatible and related uses. Nonconforming uses cause disruption of these land use plans, inhibit the present and future development of nearby properties, and confer a position of unfair advantage upon their owners, who are not obligated to comply with current zoning requirements. In addition, nonconforming uses often become visual eyesores in communities and reduce the value of adjacent properties.

Under the statute, there is no limit to the number of times a property owner may reactivate a property covered by the nonconforming use protections. Consequently, monitoring and documenting the deactivation and reactivation of nonconforming uses for a period of two and one-half years has proven to be an arduous task for municipal staffs. Furthermore, such a lengthy time period complicates a municipality's ability to achieve uniform zoning throughout its jurisdiction, making implementation of any land use plan nearly impossible.

Proposed Legislation

Amend T.C.A. 13-7-208(g) to reduce the period for the reactivation of a nonconforming use to a more reasonable period of twelve (12) months.

Anticipated Benefits to Municipalities

Reducing the period for the existence for nonconforming uses will lessen the disruption of land use plans caused by accommodating these uses, encourage present and future development of nearby properties, and minimize the advantage owners of these properties have over other property owners. Reducing the time period will also enable municipalities to uniformly enforce zoning ordinances and protect property values.

Addressing Infrastructure Needs

Background

In 1923, the General Assembly created a gasoline tax and followed in 1941 with the creation of a diesel tax. These taxes were established as user fees and the revenues were applied toward funding the cost of new construction and the maintenance of Tennessee's infrastructure.

These taxes have been increased a number of times since their inception. The last increase in the gasoline tax occurred in 1989 and diesel tax was last increased in 1990. The current gasoline tax is 20¢ per gallon with the diesel taxed at 17¢ per gallon.

Municipalities receive 12.73¢ per dollar generated from the gasoline tax and 8.70¢ per dollar generated from the diesel tax. Gas and diesel tax revenues are earmarked for municipal infrastructure and transportation needs.

Problem

In the last decade, the price of concrete has increased over 70% with the cost of asphalt surface mix increasing 120% in Tennessee. Other materials used in construction and maintenance of our roads have seen similar increases.

During this same time period, revenues from the gasoline and diesel taxes have failed to keep pace with the significant increase in the cost of materials; averaging a combined annual growth rate of just 1.9%.

In addition, Tennessee recently lost $170 million in federal infrastructure and transportation funds and anticipates losing another $64 million this year; requiring local governments to divert funds from other local programs to address immediate transportation needs.

The increased cost of road constructions materials, anemic growth in revenues, and the loss of federal funds has placed many road projects and the routine maintenance of existing infrastructure at risk. Under such constraints, Tennessee's communities will struggle to adequately support the expansion and growth that fuels the state's economy, keep pace with traffic congestion, and provide for the efficient, safe, and sustainable movement of goods and people throughout our state.

Proposed Legislation

SB 129 (Cooper)/HB 736 (Curtiss) increases the gasoline and diesel taxes by 2¢ per gallon respectively. The additional revenues generated by this increase would be distributed to local governments with 66 2/3% allocated to the various counties of the state and 33 1/3% allocated to the various municipalities of the state.

If enacted, Tennessee's gasoline and diesel tax rates would remain below the national averages leaving 28 states with higher gasoline taxes and 38 states with higher diesel taxes than Tennessee.

Anticipated Benefits to Municipalities

If enacted, the increase in the gasoline and diesel taxes will produce approximately $26.75 million annually to be distributed to municipalities based on population. This additional revenue would (1) assist municipalities in addressing continuously growing infrastructure needs, (2) keep pace with increases in the cost of materials, (3) adequately support economic expansion, (4) mitigate traffic congestion and (5) provide for the safe transport of people and goods across the state.

Technical Corrections

1. Kirk Bednar, Brentwood - Clarifying General Law Manager Commission Charter Relative to Ordinance Passage - **(page A1)**
2. City of Cleveland - Cities using distress warrants to seize property to satisfy delinquent taxes must use a sheriff's deputy, or have a police officer sworn in as special deputy, when serving distress warrant. The statute creating the procedure is antiquated. - **(page A2)**
3. Mark Johnson, Alcoa - Unifying the number of special censuses permitted - **(page A3)**

New Policy Proposals

4. Honna Rogers, Signal Mountain - Increase maximum daily fine municipalities are allowed to levy. - **(page 1)**
5. Susan Stephenson, Columbia - "Planning Commission serves solely as an Advisory Body to Chief Legislative Body (City Council) on all city matters they review" - **(page 3)**
6. Susan Stephenson, Columbia - "Rental Inspection Program" (currently, there are 2 pilot programs in TN Nashville and Oak Ridge) - **(page 4)**
7. Sally Oglesby, Crossville - Increase in Recording Fees for business Licenses to Match County Fee. - **(page 9)**
8. Sally Oglesby, Crossville - Business Tax Recording Fee for Businesses Re-locating - **(page 13)**
9. Royce Davenport, McMinnville - Two elected officials should be allowed to talk without violating open meetings law. - **(page 14)**
10. Russell Lee, Finance Director, Lebanon - The state, but not municipalities, is presently authorized to use the "reverse auction" form of municipal purchasing - **(page 21)**
11. Susan Stephenson, Columbia - Municipalities should be empowered to initiate and enforce Adequate Facilities Fees and/or Impact Fees - **(page 23)**
12. Michael Walker, Brentwood - The Streamlined Traffic Signal Management Act - **(page 28)**
13. Kevin Helms, Fayetteville - Criteria for a Referendum on Metro Government - **(page 29)**
14. Rick Gregory, Goodlettsville - PC 1008 (HB649) places a new requirement on planning commissions for review of replacement or installation of security gates or barriers. - **(page 32)**
15. City of Chattanooga, - Adding collection costs to court debt. Municipal Courts need legislative authority to add the costs of collection to delinquent cases, so that cities may be reimbursed in full if a collection agency is used. - **(page 35)**
16. Susan Stephenson, Columbia - "Board & Commission Nominations and Term Limits" (Private Act) - **(page 38)**
17. Royce Davenport, McMinnville - Allow public notice to be posted on an official government website - **(page 39)**
18. Mark Johnson, Alcoa - Permission for Utility Extension - **(page 41)**

Technical Corrections

Clarification of Emergency Ordinance Taking Effect
Kirk Bednar, Assistant City Manager, Brentwood

Problem:
The general law manager commission charter, section 6-20-215 (b) talks about an ordinance not taking effect for at least fifteen days after the first reading. It reads: An ordinance shall not take effect until fifteen (15) days after the first passage thereof, except in case of an emergency ordinance. An emergency ordinance may become effective upon the day of its final passage; provided, that it shall contain the statement that an emergency exists and shall specify the distinct facts and reasons constituting such an emergency. The intention is that ordinances (except in emergencies) cannot go into effect any sooner than 15 days after the first reading. However, the way the statute is written, it could be construed to read that ordinances automatically take effect 15 days after the first reading and it could seem to contradict section 6-20-215 (a) that says that a week must pass between first and second readings.

Proposed Remedy:
Rephrase the first sentence of T.C.A. § 6-20-215 (b) to read: "Upon final passage, an ordinance shall not take effect until after fifteen days have passed since the first reading, except in case of an emergency ordinance."

Additional Information:
Clarification of charter provisions.

Municipal Law Enforcement Officer Issue Distress Warrants
City of Cleveland

Problem:
Cities using distress warrants to seize property to satisfy delinquent taxes must use a sheriff's deputy, or have a police officer sworn in as special deputy, when serving distress warrant. The statute creating the procedure is antiquated.

Cities are authorized to use distress warrants to seize property to satisfy taxes owed by businesses, in T.C.A. § 6-55-301. The statute provides that a "sheriff, city marshal, or constable" may serve the warrant. Cities no longer have city marshals. Cities using this procedure for tax collection must use sheriffs deputies, or have a city police officer sworn in as a special deputy for this function.

Proposed Remedy:
Substitute "municipal law enforcement officer" for the title "city marshal" in the text of T.C.A. § 6-55-301. The words "city marshal" appear twice in this statute, as being the officer to receive the warrant, and the officer executing the warrant.

Anticipated Benefits:
By substituting the title "city marshal" with the words "municipal law enforcement officer," cities will be able to have their own police departments working on distress warrants, without having to include the sheriff in that function.

Additional Information:
6-55-301. Purpose. —

If any person or corporation required by law to pay privilege taxes to any municipal corporation, or to obtain a license before engaging in same, presumes to sell goods or exercise a privilege without first obtaining a license as required by law, such clerk, recorder, or collecting officer shall issue to the sheriff, city marshal, or any constable a distress warrant, commanding such sheriff, city marshal or constable to levy, in case of a privilege tax, double the highest tax imposed upon any such privilege, and in other cases double the highest tax imposed on any similar business, together with costs and charges, by distaining and selling so much of the delinquent's goods and chattels as shall be sufficient for the purpose.

Special Census
Mark Johnson - City Manager, Alcoa

Problem:
"Special censuses are authorized for cities under four statutes: T.C.A. § 6-51-114, § 54-4-203 (a) and (b), § 57-5-205 and § 67-6-103. There are two types of special censuses that cities can conduct: city wide and for annexed areas. Cities that incorporate are allowed to do a city wide annexation. The number of special censuses conducted after an annexation are unlimited and city wide special censuses are limited to either two or three between the federal censuses. The statutes are somewhat vague in relating to city wide or annexation censuses. Furthermore, one statute permits only two censuses (§ 57-5-205); two statutes permit three censuses (§ 67-6-103 and § 54-4-203 (b)); and two statutes do not limit the number of censuses allowed to be conducted (§ 6-51-114 and § 54-4-203 (a)). More specifically: • § 6-51-114 is found in the general municipal government statutes and authorizes a census of an annexed area. The number of times a city can conduct a special census of newly annexed areas is unlimited.

• § 54-4-203 is found in state street aid statutes. Subsection (a) permits, and does not limit the number of, annexation special censuses. Additional revenues from the annexation census only apply to state street aid funds. This somewhat contradicts 6-51-114 which applies the additional revenues from an annexation census to all population based state shared taxes. Subsection (b) permits cities to conduct three city wide special censuses between the 10 year federal censuses.

• § 57-5-205 is found in the beer barrel special privilege taxes and gives cities the right to conduct two special censuses between the 10 year federal censuses.

• § 67-6-103 is located with sales and use taxes. It limits special census to three city wide censuses every ten years."

Proposed Remedy:
Amend T.C.A. § 54-4-203 (b), § 57-5-205 and § 67-6-103 to clarify that the special census is "city-wide" and amend § 57-5-205 by increasing the two census threshold to three for consistency. Additionally, remove the specification in § 54-4-203 that applies the annexation special census revenues only to state street aid funds. An alternative is to remove the limits on the number of city wide censuses.

Additional Information:
Clarification and consistency of policies

Additionally, if the limit on the number of city wide censuses is raised or removed, cities stand to gain more revenues.

Newly Proposed Initiatives

$50 Fine
Honna Rogers, Town Manager, Signal Mountain

Problem:
In 1796 the original Tennessee Constitution limited fines in non-jury trials to $50. This amount has not been raised in over 200 years. A $50 daily fine is a small price for many individuals or companies who would rather pay the small fine than perform a more costly correction to a violation. This fine is inadequate to truly protect citizens from health and safety violations such as fire hazards and failure to comply with building codes.

Proposed Remedy:
Increase maximum daily fine municipalities are allowed to levy.

Anticipated Benefits:
This change will allow municipalities to levy a larger fine on violators of municipal ordinances, ultimately helping to protect citizens.

Additional Information:
Legal Authority - Article VI, Section 14, of the Tennessee Constitution provides that:

No fine shall be laid on any citizen of this State that shall exceed fifty dollars, unless it shall be assessed by a jury of his peers, who shall assess the fine at the time they find the fact, if they think the fine should be more than fifty dollars.

This provision was part of the state's original constitution written in 1796, and it still exists today. The state constitution also provides two different methods of amendment: 1) A constitutional convention may be called; and 2) Two subsequent General Assemblies must approve resolutions proposing a constitutional amendment, and the resolution must be approved by a majority of the voters voting in the next gubernatorial election.

<u>Efforts to Modify the Constitutional Provision</u>

In the past, TML pursued change by introducing a constitutional amendment, since a constitutional convention is typically called to deal with broad issues like taxation or public education. The effort was called "Question 2," as it was listed as the second constitutional item to be considered by voters on the November 5, 2002, general election ballot. Although "Question 2" received more "yes" votes than "no" votes during this election, the measure failed, as it did not receive the majority of the votes cast for governor.

During the 103rd General Assembly, TML introduced a new constitutional amendment that passed 22-5 in the Senate. In the House, the $50 fine amendment became embroiled in debates on unrelated constitutional amendments involving same sex marriage and abortion. Consequently, it failed in the House Calendar & Rules committee in May of 2004.

In 2006, TML attempted constitutional change again, but the General Assembly was not receptive to the proposal.

In 2007, the Administrative office of the Courts (AOC) filed SJR 724 (Wilder) and HJR 808 (Coleman), which would have allowed the maximum fine for a municipal ordinance violation to be set by the General Assembly, not to exceed $500. While the Senate passed SJR724, HJR 808 was pending in the House Budget Subcommittee when the General Assembly adjourned. TML supported the passage of this resolution.

Court action

Cities received a favorable vote in the case of *King v. Town of Nolensville* from the Court of Appeals, where the court held that a defendant in a municipal court has the right to a *de novo* appeal (completely new hearing), to the circuit court, where a jury would be available.

The case was appealed to the Supreme Court, which reversed the opinion of the Court of Appeals on December 16, 2004, stating that the $50 limit still applied and that it would be up to the General Assembly and the people of Tennessee to change the provision of the state constitution prohibiting any fine in excess of $50 unless it is assessed by a jury.

Implications

The 1796 prohibition is still in effect today, and municipalities cannot charge more than $50, even for major health and safety violations like environmental dumping, fire hazards, and failure to comply with building codes.

15

No

Planning Commission as Advisory Board
Susan Stephenson, Councilwoman, Columbia

Problem:
Currently, Planning Commissions have final approval powers regarding preliminary and final plats, as well as over site development plans. Regardless of public opposition or opposition to plats or plans by the Chief Legislative Body (City Council), the Planning Commission essentially has the power to ignore any and all opposing views. No planning Commission should have the authority to disregard and overrule the Chief Legislative Body (City Council) who are publicly elected officials. When public complaints are communicated to elected officials of the City Council regarding decisions made by the Planning Commission, neither the City Council nor the public have any recourse of ability to appeal those Planning Commission decisions. It should be remembered that it is the Chief Legislative Body who is accountable to the public, not the Planning Commission appointees. But, most importantly, it is the Chief Legislative Body who is responsible for making sure that there is adequate revenue for all city expenditures and plans, and it is they who have to determine that the city budget has what it needs to support increasing city services, expenses, and infrastructure for many years to come. No appointed Planning Commission should have more power than the duly elected Chief Legislative Body of the City.

1) The Planning Commission shall review preliminary and final plats, as well as site development plans.
2) The planning Commission shall forward their recommendations to the Chief Legislative body of the City.
3) Planning Commission meetings shall be audio-taped and video-taped to provide a permanent verbatim record for the City Council to review when needed.
4) The chief legislative Body (City Council) shall have final approval of all preliminary plats, final plats, and site development plans for the city.

The Chief Legislative Body (City Council) is comprised of duly elected officials who have been chosen to represent the people of the city, and to protect the public. Their decision-making powers and authority should supersede the powers of the Planning Commission appointees. The Chief Legislative Body (City Council) should have final approval over all decisions (such as planning, revitalization, and growth) that will eventually have to be sustained by city revenue and taxpayers' dollars. Planning Commission decisions regarding preliminary and final plats, and site development plans will inevitably require the support of city revenue, and considering this fact, the Chief Legislative Body (City Council) should have final approval and jurisdiction over matters such as these. And, it is here that the public can have an opportunity to appeal the decisions and recommendations of the Planning Commission. The Planning Commission should serve only in an advisory capacity. City Council members' hands have been tied for way too long.

Proposed Remedy:
Create statute for Planning Commission to serve solely as an Advisory Body to Chief Legislative Body (City Council) on all city matters they review.

Anticipated Benefits:
Now, instead of looking at constituents who voice complaints and plea for help, Council members will have the ability to take some action instead of saying, "There is nothing I can do about the Planning Commission's decisions."

Rental Inspection Program
Susan Stephenson, Councilwoman, Columbia

Problem:
Presently, rental property owners are not accountable, particularly for the interior conditions of their rental business properties. Municipalities need the authority to monitor and inspect these properties regularly and as-needed per complaints.

1) Municipalities shall establish a database of rental properties, including # of units and # of inhabitants per unit (applicable in regard to multi-family dwellings).
2) Rental property owners must register their rental properties with the city annually.
3) Municipalities, specifically building and fire codes inspectors, shall inspect rental properties a minimum of twice annually, and following any complaints.
4) Code and ordinance violations shall be cited into court.
5) Maximum $500.00 per day fines can be assessed on the property owners.

This lack of accountability, monitoring and regulation is an absolute detriment and hazard to public health, safety and welfare. Renters cannot complain about housing conditions for fear of harassment and possible eviction. Renters who pay for housing must be protected from codes violations that endanger lives (a child's bed covering exposed wiring, for example).

Proposed Remedy:
Create a "Rental Inspection Program" (currently, there are 2 pilot programs in TN - Nashville and Oak Ridge)

Anticipated Benefits:
Municipalities will be able to protect their citizens from hazardous rental properties and allow affected renters recourse.

Additional Information:
In 2006, the General Assembly enacted Public Chapter 949, a bill that allows Metro Nashville and the City of Oak Ridge to designate geographic districts for the inspection of deteriorating residential rental property for health and safety hazards. This proposal would expand the inspection authority to all municipalities.

PC 949
HOUSE BILL NO. 3202
By Representatives Odom, Pruitt, West, Sherry Jones, Briley, Mike Turner, Moore
Substituted for: Senate Bill No. 3174
By Senators Harper, Haynes
AN ACT to amend Tennessee Code Annotated, Title 13, Chapter 21, relative to residential rental inspections.
BE IT ENACTED BY THE GENERAL ASSEMBLY OF THE STATE OF TENNESSEE:
SECTION 1. Tennessee Code Annotated, Title 13, Chapter 21, is amended by adding the following language as a new part:
Section 13-21-301. For the purposes of this part, unless the context otherwise requires:
(1) "Deteriorated" means any structure or vacant or unimproved lot or parcel in a predominantly built-up neighborhood:

(A) Which, because of physical condition or use, is regarded as a public nuisance at common law or has been declared a public nuisance in accordance with local housing, building, plumbing, electrical, fire, health or related codes;
(B) Which, because of physical condition, use or occupancy is considered an attractive nuisance;
(C) Which, because it is dilapidated, unsanitary, unsafe, vermininfested or other condition, has been designated by the appropriate agency or department of the municipality as unfit for human habitation or use;
(D) Which is a fire hazard, or is otherwise dangerous to the safety of persons or property;
(E) From which the utilities, plumbing, heating, sewerage or other facilities have been disconnected, destroyed, removed, or rendered ineffective so that the property is unfit for human habitation or use;
(F) Which, by reason of neglect or lack of maintenance, has become a place for accumulation of trash and debris, or a haven for rodents or other vermin;
(G) Which has been tax delinquent for a period of at least three (3) years; or
Chapter No. 949] PUBLIC ACTS, 2006 2
(H) Which has not been rehabilitated within the time constraints placed upon the owner or party in interest by the municipality;
(2) "Dwelling" means any building or structure, or part thereof, used and occupied for human occupation or use or intended to be so used, and includes any outhouses and appurtenances belonging thereto or usually enjoyed therewith;
(3) "Dwelling unit" means a building or structure or part thereof that is used for a home or residence by one (1) or more persons who maintain a household;
(4) "Governing body" means the council, commission, or board, or other legislative body, charged with governing a municipality;
(5) "Municipality" means any county, including any county having a metropolitan form of government, or incorporated city or town in this state;
(6) "Owner" means the holder of the title to real property and every mortgagee of record;
(7) "Parties in interest" means all individuals, associations, corporations and others who have interests of record in a structure and any who are in possession thereof;
(8) "Public authority" means any department, agency or branch of the government of the municipality or state relating to health, fire, building regulations, or other activities concerning structures in the municipality;
(9) "Public officer" means any officer or officers of a municipality or the executive director or other chief executive officer of any commission or authority established by such municipality or jointly with any other municipality who are authorized by ordinance adopted hereunder to exercise the power prescribed by such ordinances and by this part;
(10) "Residential rental dwelling unit" means a dwelling unit that is leased or rented to one (1) or more tenants. However, a dwelling unit occupied in part by the owner thereof shall not be construed to be a residential rental dwelling unit unless otherwise provided by the zoning ordinance of the municipality; and
(11) "Structure" means any dwelling or place of public accommodation or vacant building or structure suitable as a dwelling or place of public accommodation.
Section 13-21-302.
(a) The governing body of a municipality may adopt an ordinance to

inspect residential rental dwelling units that are either deteriorated or in the process of deteriorating for compliance with applicable local housing, building, plumbing, electrical, fire, health or related codes and to promote the health, safety and welfare of its citizens in accordance with the following:

Chapter No. 949] PUBLIC ACTS, 2006 3

(1) The dwelling units shall be located in a residential rental inspection district established by the local governing body in accordance with this section, and

(2) The residential rental inspection district shall be based upon a finding by the local governing body that:

(A) There is a need to protect the public health, safety and welfare of the occupants of dwelling units inside the designated residential rental inspection district;

(B) The residential rental dwelling units within the designated residential rental inspection district are either deteriorated or in the process of deteriorating or the residential rental dwelling units are in the need of inspection by the municipality to prevent deterioration, taking into account the number, age and condition of residential dwelling rental units inside the proposed residential rental inspection district; and

(C) The inspection of residential rental dwelling units inside the proposed residential rental inspection district is necessary to maintain the health, safety and welfare of tenants and other residents living in the proposed residential rental inspection district. Nothing in this section shall be construed to authorize a municipality-wide residential rental inspection district and a local governing body shall limit the boundaries of the proposed residential rental inspection district to such areas of the municipality that meet the criteria set forth in this section.

(b) For purposes of this part, the local governing body of the municipality may designate any local government department or agency to serve as the public authority to perform all or part of the duties authorized by this part.

Section 13-21-303. Upon adoption by the municipality of a residential rental inspection ordinance relating to residential rental dwelling units that are either deteriorated or in the process of deteriorating, the public authority shall make reasonable efforts to notify owners and parties in interest of residential rental dwelling units in the designated residential rental inspection district regarding the adoption of the residential rental inspection ordinance. The public authority shall provide a summary of the provisions of the residential rental inspection ordinance to owners and parties in interest of residential rental dwelling units in the designated residential rental inspection district.

Section 13-21-304. The residential rental inspection ordinance may include a provision that requires the owners and parties in interest of dwelling units in a residential rental inspection district to notify the public authority in writing if the dwelling unit is used for residential rental purposes. The public authority may develop a form for such purposes. The residential rental inspection ordinance shall not include a registration fee or a fee of any kind associated with the written notification pursuant to this section. A residential rental inspection ordinance shall not require that the written notification from the owner or party in interest of a dwelling unit subject to the residential rental inspection

Chapter No. 949] PUBLIC ACTS, 2006 4

ordinance be provided to the public authority in less than sixty (60) days after the adoption of a residential rental inspection ordinance. However, there shall be no penalty for the failure of an owner or party in interest of a residential rental dwelling unit to comply with the provisions of this section, unless and until the public authority provides actual or written notice to the property owner or party in interest, as provided in this part. For purposes of this part, notice sent by regular first class mail to the last known address of the owner or party in interest shall be deemed in compliance with this section.

Section 13-21-305. Upon establishment of a residential rental inspection district in accordance with this part, the public authority may, in conjunction with the written notifications as provided for in this part, proceed to inspect dwelling units that are either deteriorated or in the process of deteriorating located in the designated residential rental inspection district to determine if the dwelling units are being used as a residential rental property and to determine if the dwelling units are in compliance with applicable housing, building, plumbing, electrical, fire, health or related codes.
Section 13-21-306. Except as provided in 13-21-307, following the initial inspection of a residential rental dwelling unit found to be deteriorated or in the process of deteriorating, the public authority may inspect periodically any residential rental dwelling unit that is deteriorated or in the process of deteriorating that is not otherwise exempted by this part.
Section 13-21-307. Following the initial or periodic inspection of a residential rental dwelling unit found to be deteriorated or in the process of deteriorating and which is subject to a residential rental inspection ordinance, the public authority has the authority to require the owner or party in interest of such dwelling unit to submit to such follow-up inspections of the dwelling unit as the public authority deems necessary, until such time as the dwelling unit is brought into compliance with the provisions of all applicable housing, building, plumbing, electrical, fire, health or related codes.
Section 13-21-308. Following the initial or periodic inspection of a residential rental dwelling unit found to be deteriorated or in the process of deteriorating and which is subject to a residential rental inspection ordinance, and provided that there are no violations of applicable codes and ordinances, or such violations are remedied in a timely manner, the public authority shall provide to the owner or party in interest of such residential rental dwelling unit an exemption from the residential rental inspection ordinance for a minimum of four (4) years. For the purposes of this section, timely manner shall be construed to mean less than ninety (90) days after the owner has been given notice of violation. If a residential rental dwelling unit has been issued a certificate of occupancy within the last four (4) years, an exemption shall be granted for a minimum period of four (4) years from the date of the issuance of the certificate of occupancy by the public authority. If the residential rental dwelling unit becomes in violation of local housing, building, plumbing, electrical, fire, health or related codes during the exemption period, the public authority may revoke the exemption granted by this section.
Section 13-21-309. The residential rental inspection ordinance adopted by the governing body of the municipality may authorize the public officer to exercise such powers as may be necessary or convenient to carry out and effectuate the purposes and provisions of this part, including the following powers to:
Chapter No. 949] PUBLIC ACTS, 2006 5
(1) Investigate conditions in the municipality in order to determine which residential rental dwelling units therein are deteriorated or in the process of deteriorating;
(2) Administer oaths, affirmations, examine witnesses, issue subpoenas and receive evidence;
(3) Enter upon the premises for the purpose of making examinations and inspections; provided, the public officer may enter inside the dwelling unit only with the consent of a person in possession, or with a validly issued search warrant, or in the event of an emergency presenting an immediate threat to the health, safety, and welfare of a person in possession. Such entry shall comply in all respects with the Fourth Amendment to the Constitution of the United States as well as Article I, Section 7, of the Constitution of Tennessee. Such entry shall be made in such manner as to cause the least possible inconvenience to a person in possession;
(4) Appoint and fix the duties of such officers, agents and employees as the public officer deems necessary to carry out the purposes of the residential rental inspection ordinance; and
(5) Delegate any of such public officer's functions and powers under the

residential rental inspection ordinance to such officers and agents as the public officer may designate.

Section 13-21-310. A local governing body may not establish a fee schedule to administer the provisions of the residential rental inspection ordinance which includes a per dwelling unit fee for the initial inspections, follow-up inspections, and periodic inspections of dwelling units that are deteriorated or in the process of deteriorating as authorized by this part. In addition, no fee shall be charged to an owner or party in interest for an inspection of a dwelling unit subject to the residential rental inspection ordinance who has submitted a written notification to the public authority as to the identity of such unit owner or party in interest as provided in §13-21-304, nor shall a fee be charged for a subsequent inspection of a residential dwelling unit that has received an exemption from the residential inspection ordinance for a minimum of four (4) years pursuant to §13-21-308.

Section 13-21-311. The provisions of this part shall not, in any way, alter the rights and obligations of landlords and tenants as set forth by the Uniform Residential Landlord and Tenant Act, compiled in title 66, chapter 28.

Section 13-21-312. Nothing in this part shall be construed to abrogate or impair the powers of the courts or of any department of any municipality to enforce any provisions of its charter or its ordinances or regulations, nor to prevent or punish violations thereof, and the powers conferred by this part shall be in addition and supplemental to the powers conferred by any other law.

Section 13-21-313. The residential rental inspection ordinance adopted by the governing body of the municipality may authorize penalties for the willful failure or refusal of an owner or party in interest to comply with the notice or inspection requirements authorized by this part.

Chapter No. 949] PUBLIC ACTS, 2006 6

Section 13-21-314. The provisions of this act shall apply to any county having a metropolitan form of government and a population in excess of five hundred thousand (500,000) according to the 2000 federal census or any subsequent federal census. In addition, the provisions of this act shall apply in any city having a population of not less than twenty seven thousand three hundred eighty (27,380) nor more than twenty seven thousand three hundred ninety (27,390) according to the 2000 federal census or any subsequent federal census.

SECTION 2. If any provision of this act or the application thereof to any person or circumstance is held invalid, such invalidity shall not affect other provisions or applications of the act which can be given effect without the invalid provision or application, and to that end the provisions of this act are declared to be severable.

SECTION 3. This act shall take effect July 1, 2006, the public welfare requiring it.

PASSED: May 25, 2006

APPROVED this 20th day of June 2006

Business Tax Return Collection Fee
Sally Oglesby, City Clerk, Crossville

Problem:
Public Chapter 924 of 2008 amended the collecting and recording fee from business tax returns from $5.00 to $7.00 per return for County Clerks only. The additional $2.00 must be earmarked for computer hardware purchases or replacement, but can also be used for other usual and necessary computer -related expenses. This change was not authorized for cities and was confusing to businesses when implemented on July 1 because the fees are now different. The fee has been at $5.00 since 1989. Some businesses have actually paid the $7.00 assuming that it had changed for the city as well.

Proposed Remedy:
Amend T.C.A. 67-4-717 to allow municipalities to charge $7.00 for collecting and recording business tax returns.

Anticipated Benefits:
This should create additional revenues to compensate for higher labor and software costs since1989 and to eliminate some of the confusion for businesses as they prepare City and County returns.

Additional Information:
Bill Text for County Clerks:

Public Chapter No. 924 PUBLIC ACTS, 2008
SENATE BILL NO. 3195
By Bunch
Substituted for: House Bill No. 2855
By Sherry Jones
AN ACT to amend Tennessee Code Annotated, Title 8; Section 8-21-701; Title 10; Title 36; Title 44; Title 45; Title 55; Title 56; Title 62; Title 67; Title 68; Title 69; Title 70 and Chapter 660 of the Public Acts of 2004, relative to fees and functions of the office of county clerk.
BE IT ENACTED BY THE GENERAL ASSEMBLY OF THE STATE OF TENNESSEE:
SECTION 1. Tennessee Code Annotated, Section 8-21-701, is amended by deleting the section in its entirety and substituting the following:
8-21-701.
In addition to any other fees for services established by law, county clerks are entitled to demand and receive for the following services the fees attached:
(1) For issuance of marriage license $10.00
(2) For collecting and recording amounts from the business tax, per return 7.00
Of the amount collected, two dollars ($2.00) shall be earmarked for computer hardware purchases or replacement, but may be used for other usual and necessary computer related expenses at the discretion of the county clerk. Such amount shall be preserved for these purposes and shall not revert to the general fund at the end of a budget year if unexpended;
(3) For transfer of business license from one location to another..... 5.00
(4) For certifying a notary public's election to the secretary of state pursuant to § 8-16-106 ..... 7.00
(5) For receiving and forwarding notice of notary public name

change
or change of address pursuant to § 8-16-109 ..... 5.00
(6) For taking and recording official bonds and revenue bonds..... 2.00
(7) For receiving and paying over state and county revenue, on
the amount collected and paid over..... 5%
(8) For ex officio services, the legislative body may make an
allowance not exceeding 50.00
(9) For attending to prosecution for penalties under provisions of
the
inspection laws, on sums collected and paid into the state treasury 10%
(10) For services in the recovery of penalties prescribed against
breach of revenue laws in relation to licenses, double fees.
(11) For certifying a copy of a document or taking an
acknowledgment
or affixing seal 5.00
(12) For making copies, per page..... .50
(13) For handling refunds of amounts overpaid..... up to 2.00
A county clerk shall adopt a policy establishing a procedure to be
followed if the county clerk receives payments of taxes or fees in excess
of the required amount, and that policy shall include one or more of the
following:
(A) Contacting the person or entity tendering the payment
for specific instructions regarding the excess amount;
(B) Allowing the county clerk's office to retain reasonable
overage amounts as fees of the office; or
(C) Providing a refund of the excess moneys, less a
reasonable amount of the excess payment retained as fees of the
office;
(14) For issuance of permits and licenses for which fees are not
otherwise provided 5.00
(15) For filing documents for which fee is not otherwise provided..... 5.00
(16) For county clerks performing services as clerk of a court, the
fees
prescribed in Part 4 of this chapter.
SECTION 2. Tennessee Code Annotated, Section 44-7-301, is amended by
deleting the following language:
", and the county clerk shall be allowed the sum of fifty cents (50¢) as fee for
filing, recording, and making three (3) certified copies of the pedigree".
SECTION 3. Tennessee Code Annotated, Section 67-4-721(d)(2), is amended by
deleting the language "and payment of a three dollar and fifty cents ($3.50) recording fee
for the new location" and substituting instead the following:
for the new location and payment of the fee set out in § 8-21-701.
SECTION 4. Chapter 660 of the Public Acts of 2004 is amended by deleting
Section 5, which read:
Tennessee Code Annotated, Section 55-4-132(a), shall cease to be
effective June 30, 2008, and on such date, the fee authorized in subsection (a)
shall no longer be imposed or collected.
SECTION 5. Tennessee Code Annotated, Section 55-4-105, is amended by
deleting the last sentence of subsection (c) and substituting instead the following:
Each county clerk may impose a fee of two dollars ($2.00) for the service of
handling mail orders of plates and decals.
SECTION 6. Tennessee Code Annotated, Section 55-4-115, is amended by
deleting subdivision (a)(11) in its entirety. Tennessee Code Annotated, Section 55-4-
115, is further amended by deleting from subdivision (a)(1) the words and figures "five
dollars and fifty cents ($5.50)" wherever they appear and substituting instead "ten dollars
($10.00)". Tennessee Code Annotated, Section 55-4-115, is further amended by adding

the following at the end of subdivision (a)(1): "The commissioner is authorized to prescribe by regulation the method by which temporary operation permits shall be issued. In the event such permits are issued through the offices of the county clerks of the state, out of the ten dollar ($10.00) issuance fee the clerks shall retain as compensation for services a fee of four dollars and fifty cents ($4.50) and shall remit the remaining five dollars and fifty cents ($5.50) to the commissioner.".

SECTION 7. Tennessee Code Annotated, Section 55-4-117, is amended by deleting from subdivision (b)(3) the words and figures "one dollar and twenty-five cents ($1.25)" and substituting instead "two dollars ($2.00)".

SECTION 8. Tennessee Code Annotated, Section 55-4-201, is amended by adding a new subdivision (b)(5) which shall read as follows: "A handling fee of one dollar ($1.00) payable to the county clerk upon issuance or renewal of any cultural, specialty earmarked, or new specialty earmarked license plate, except plates exempted from payment of fees under § 55-4-203 or any other applicable provision of this part.".

SECTION 9. Tennessee Code Annotated, Section 55-6-104, is amended by deleting from subdivision (2) the words and figures "fifty cents (50¢)" and substituting instead "three dollars ($3.00)".

SECTION 10. Tennessee Code Annotated, Section 55-6-104, is amended by deleting the last sentence in subdivision (3). Tennessee Code Annotated, Section 55-6-104, is further amended by deleting the last sentence in subdivision (4).

SECTION 11. Tennessee Code Annotated, Section 55-6-101, is amended by deleting from subdivision (a)(1) the words and figures "five dollars ($5.00)" and substituting instead "five dollars and fifty cents ($5.50)". Tennessee Code Annotated, Section 55-6-101, is further amended by deleting from subdivision (a)(4) the words and figures "five dollars ($5.00)" and substituting instead "five dollars and fifty cents ($5.50)".

SECTION 12. Tennessee Code Annotated, Section 55-4-201(b), is amended by deleting subdivision (2) and substituting instead the following:

(2) An additional fee of thirty-five dollars ($35.00) to be paid by the applicant upon issuance and renewal, except as specifically provided otherwise by § 55-4-203 or any other applicable provision of this part.

SECTION 13. Tennessee Code Annotated, Section 55-4-203, is amended by deleting subsection (d) and substituting instead the following:

(d) All other cultural, specialty earmarked and new specialty earmarked plates authorized by this part shall be issued upon the payment of a fee of thirtyfive dollars ($35.00) in addition to the regular registration fee, in accordance with the provisions of § 55-4-201(b)(2).

SECTION 14. Tennessee Code Annotated, Section 55-4-211(a), is amended by deleting subdivision (1) and substituting instead the following:

(1) In addition to the personalized plates authorized by § 55-4-210, an applicant may, through the payment of a personalization fee of thirty-five dollars ($35.00) in addition to the regular registration fee and the thirty-five dollar ($35.00) fee established by § 55-4-201(b)(2), obtain certain cultural, specialty earmarked and new specialty earmarked plates with a personalized combination of numbers, letters, positions or a combination thereof.

SECTION 15. Tennessee Code Annotated, Section 68-3-401, is amended by deleting subsection (f).

SECTION 16. Tennessee Code Annotated, Section 36-6-413, is amended by deleting the following sentence from subdivision (b)(2):

For each application for marriage, including an application from persons exempt from the sixty-dollar ($60.00) fee, a fee of two dollars and fifty cents ($2.50) shall be paid to the county clerk for the services provided under this section.

SECTION 17. Section 8 of this act shall take effect on January 1, 2009, and the remaining provisions of this act shall take effect on July 1, 2008, the public welfare requiring it.

PASSED: April 24, 2008

Public Chapter No. 924 PUBLIC ACTS, 2008
APPROVED this 15th day of May 2008

Also
T.C.A. 67-4-717:

67-4-717. Fees for collecting and recording taxes. —
Any municipal official of any municipality of the state, responsible for the collection and recording of taxes levied under this part, for collecting and recording amounts from the business tax may charge a fee of five dollars ($5.00), except this fee may not be charged persons paying the annual minimum tax under the provisions of this part, if paid on the same date as the respective and related return is filed.

Increase Fee for Business License Transfer
Sally Oglesby, City Clerk, Crossville

Problem:
T.C.A. 67-4-721(2) retains the recording fee at $3.50 for the transfer of a business license from one location to another location. The $3.50 fee is a hold-over from the pre-1989 recording fee. This fee should be the same as the regular recording fee of $5.00 ($7.00 -- if another initiative is adopted) to avoid confusion.

Proposed Remedy:
Amend T.C.A. 67-4-721(2) to $5.00 ($7.00 if other initiative is adopted) for the recording fee to transfer a business to a new location.

Anticipated Benefits:
Additional revenue; avoid conflicts in implementation.

Additional Information:
T.C.A. 67-4-721(2):
67-4-721. Settlement upon termination or transfer of business. —

(a) If any person liable for any tax, penalty or interest levied by this part shall sell out the person's business or stock of goods, or shall quit the business, the person shall make a final return and payment within fifteen (15) days after the date of selling or quitting the business.

(b) The person's successor, successors, or assigns, if any, shall withhold sufficient of the purchase money to cover the amount of such taxes, interest, and penalties due and unpaid until such former owner shall produce a receipt from the county clerk, in the case of counties, and proper city collector, in the case of cities, showing that they have been paid, or a certificate stating that no taxes, interest or penalties are due.

(c) If the purchaser of a business or stock of goods shall fail to withhold the purchase money as provided in subsection (b), the purchaser shall be personally liable for the payment of the taxes, interest and penalties accruing and unpaid on account of the operation of the business by any former owner, owners, or assigns.

(d) (1) Nothing in this section shall apply to any licensee transferring a business from one location to another, within the same municipality, on a one-time basis during any annual taxable period.

(2) In the event of a transfer as described in subdivision (d)(1), a licensee shall notify the local tax collector at least five (5) days prior to the last day of business at the old location, submitting information and payment of a three dollar and fifty cents ($3.50) recording fee for the new location.

(3) Succeeding transfers by the same licensee, within the same annual taxable period, shall be subject to a final return and payment within fifteen (15) days, plus a new minimum business license and recording fee for the new location.

Allow Two Members to Meet (Open Meetings)
Royce Davenport, Mayor, McMinnville

Problem:
Cities, counties, as well as members of the legislature must be able to talk to each other in order to understand problems and issues facing government. The Open Meeting law prohibits two alderman, for example, from talking to each other without giving public notice. Cities would be better served if aldermen were encouraged to talk to each other, so long as two aldermen does not represent a quorum. City government meetings are perhaps more contentious than ever today and largely due to suspicions and misunderstanding brought about by very poor communication that is facilitated by a law that is currently not working.

Proposed Remedy:
Amend the Open Meetings law to allow two city board members to talk to each other so long as the two do not represent a quorum.

Anticipated Benefits:
Amending the current law will help to reduce suspicions and lack of trust among governing board members, and will facilitate improved communication and collaboration in developing solutions for municipal issues. It will also do a great deal toward eliminating the hostile environment that sometimes characterizes city board meetings.

Additional Information:
Report of the Joint Study Committee on Open Government:

The following are recommendations that were favorably adopted by the Joint Study Committee on Open Government on November 27-28, 2007:

PART I. *Statutory Changes*

SECTION 1. Tennessee Code Annotated, Section 8-44-101, is amended by deleting subsection (a) and substituting instead the following:
(a) Because openness in government supports and enhances public confidence, discourages abuse, and allows citizens to participate equally in decisions affecting their lives, the general assembly hereby declares it to be the policy of this state that the formation of public policy and decisions is public business and shall not be conducted in secret.
SECTION 2. Tennessee Code Annotated, Section 8-44-102(b), is amended by deleting subdivision (2) in its entirety and substituting instead the following:
(2) "Meeting" means more than three (3) members or a majority of members of a governing body, whichever is less, is present and public business within the jurisdiction of that governing body is being deliberated or decided. Meeting does not include any on-site inspection of any project or program.
SECTION 3. Tennessee Code Annotated, Section 8-44-102, is amended by deleting subsection (c) in its entirety and substituting instead the following language:
(c) A governing body shall not hold a series of gatherings with less than the required number of members present as described in (b)(2) where the purpose of the gatherings is to avoid compliance with this chapter.

(d) This section shall not be construed as prohibiting discussions or the mere communication of factual information between individual members of a governing body where the purpose is to educate members on specific issues.

(e) Nothing in this section shall be construed as to require a chance meeting of more than three (3) members or a majority of members of a governing body, whichever is less, to be considered a public meeting. No such chance meetings, informal assemblages, or electronic communication shall be used to decide or deliberate public business in circumvention of the spirit or requirements of this part.

SECTION 4. Tennessee Code Annotated, Section 8-44-106, is amended by adding the following as a new subsection thereto:

(e) If the plaintiff substantially prevails on any part of the claim against the governing body, the court, in its discretion, may award reasonable attorneys' fees against the governing body.

SECTION 5. Tennessee Code Annotated, Title 8, Chapter 44, Part 1Error! Bookmark not defined., is amended by adding the following as a new section thereto:
§ 8-44-109.

(a) The municipal technical advisory service (MTAS) for municipalities and the county technical assistance service (CTAS) for counties, in order to provide guidance and direction, shall develop a program for educating their respective public officials about the Open Meetings Law and how to remain in compliance with such law. MTAS shall also develop such a program for members of local planning commissions created by municipalities. CTAS shall also develop such a program for members of local planning commissions created by counties and regional planning commissions.

(b) The Tennessee School Board Association shall develop a program for educating elected school board members about the Open Meetings Law and how to remain in compliance with such law.

(c) The utility management review board shall develop a program for board members of water, wastewater and gas authorities created by private act or under the general law and of utility districts in order to educate such board members about the Open Meetings Law and how to remain in compliance with such law.

(d) The state emergency communications board created by § 7-86-302 shall develop a program for educating emergency communications district board members about the Open Meetings Law and how to remain in compliance with such law.

SECTION 6. Tennessee Code Annotated, Title 8, Chapter 44, Part 1Error! Bookmark not defined., is amended by adding the following as a new section thereto:

§ 8-44-110.

(a) Executive sessions are not required by this part, but may be held by a governing body for the following purposes:

(1) To discuss the general reputation and character, physical condition, professional competence, or mental health of individuals, or, subject to the limitations set out herein, to discuss the job performance of certain public employees. However, except as provided elsewhere in this section, discussions of the job performance of specific public officials or specific public employees may not be discussed in executive session if the person is an elected or appointed public official, an appointed member of a state or local board or commission, or a public employee who is one of the classification of public employees required to file a disclosure statement of conflict of interests with the Tennessee Ethics Commission pursuant to § 8-50-501. Except as provided elsewhere in this section, the salary, compensation, and job benefits of specific public officials or specific public employees may not be discussed in executive session.

(2) When expressly allowed by federal law or state law, to consider the discipline or dismissal of, or to hear formal written complaints or charges brought against a public employee.

(3) To discuss the consideration the governing body is willing to offer or accept when considering the purchase, sale, exchange, lease, or market value of real property. Provided, however, that the material terms of any contract to purchase, exchange, or lease real property shall be disclosed in the public portion of a meeting prior to the execution of the contract. If an executive session is utilized pursuant to this exception in addition to the members of the governing body, only persons

representing the interests of the governing body in the transaction may be present during the executive session. This real property discussion exception shall not apply if:
(A) Any member of the governing body involved in the transaction has a personal interest in the transaction and attends or participates in the executive session concerning the real property.
(B) A condemnation action has been filed to acquire the real property involved in the discussion.

(4) To discuss strategy in preparation for negotiations between the governing body and a group of public employees.

(5) To discuss and evaluate the job performance of the director of schools with a written evaluation from the discussion that would be made public.

(b) Hospitals subject to the Open Meetings Law or the Open Records Law, may discuss and develop marketing strategies and strategic plans in closed meetings. Action by the board of the hospital adopting such a specific strategy or plan shall be openly discussed before the board votes.

(c) Nothing in this section requires that a governing body hold a meeting or any portion of a meeting in closed session.

(d) Before any meeting shall be closed under this section:

(1) A quorum of the governing body shall convene in public. The presiding officer, or in the case of attorney-client meetings, counsel shall explain to the members and public assembled the specific statutory or legal exemption for closing the meeting.

(2) Members of the governing body shall vote by roll call in the public portion of the meeting on whether the closing is necessary. A majority vote shall be required to go into executive session.

(3) The presiding officer or counsel representing the governing body shall explain to the members of the governing body and any members of the public present that no other business shall be discussed during the closed session.

(4) Any meeting or portion of a meeting to be closed pursuant to the pending litigation or pending controversy exemption shall be conducted by the lawyer for the governing body who shall:
(A) Advise the members that the meeting is between the lawyer and the client;
(B) Explain that the meeting is being held for the sole purpose of relaying confidential client communication and legal advice regarding pending or anticipated litigation; and
(C) Explain that all comments from the members shall be directed to the lawyer.

SECTION 7. Tennessee Code Annotated, Section 10-7-503, is amended by deleting subsection (a) in its entirety and substituting instead the following:

(a)

(1) All state, county and municipal records shall at all times, during business hours, be open for personal inspection by any person, and those in charge of such records shall not refuse such right of inspection, unless otherwise provided by state law.

(2) The custodian of a public record or the custodian's designee shall promptly make available for inspection and copying any public record not specifically exempt from disclosure. In the event that is not practicable for the record to be promptly available for inspection and copying, the custodian shall within four (4) business days:
(A) Make such information available to the requestor;
(B) Deny the request in writing by citing the specific legal exemption; or
(C) Furnish a written acknowledgement of the request and a statement of the time reasonably necessary to produce such information or to determine whether the request shall be granted or denied.

Failure to respond to the request as described above shall constitute a denial and the person making the request shall have the right to bring an action as provided in § 10-7-505.

(3) This section shall not be construed as requiring a governmental entity or public official to sort through files to compile information; however a person requesting such information shall be allowed to inspect the records and retrieve the information.

(4) This section shall not be construed as requiring a governmental entity or public official to create a record that does not exist; however the redaction of confidential information from a public record or electronic database shall not constitute a new record.

(5) A governmental entity is prohibited from avoiding its disclosure obligations by contractually delegating its responsibility of inspecting and copying records to a private entity.

(6) A governmental entity or public official shall not require a request for a public record to be in writing or on a specific form unless such request is reasonably considered to be complicated and the entity or official reasonably determines it may be necessary to contact the requestor for further information.
(7) Identification shall only be required in retrieving a public record if such record is reasonably determined to involve personal security by the entity or official retrieving such record.
(8) "Public record or records" or "state record or records" means all documents, papers, letters, maps, books, photographs, microfilms, electronic data processing files and output, films, sound recordings, or other material, regardless of physical form or characteristics made or received pursuant to law or ordinance or in connection with the transaction of official business by any governmental agency.
SECTION 8. Tennessee Code Annotated, Section 10-7-504, is amended by adding the following as a new subsection thereto:

(j) Hospitals subject to the open records Laws, may treat marketing strategies and strategic plans including feasibility studies, as confidential and not subject to public inspection. The marketing strategies and strategic plans including feasibility studies, shall become open to public inspection when the board of the hospital places the adoption of a specific strategy or plan on its agenda for open discussion.

SECTION 9. Tennessee Code Annotated, Section 10-7-505, is amended by deleting the language "citizen of Tennessee" in subsection (a) and substituting instead the language "person".
SECTION 10. Tennessee Code Annotated, Section 10-7-505(b), is amended by adding the language "or circuit court" immediately after the language "chancery court" in the first sentence.
SECTION 11. Tennessee Code Annotated, Section 10-7-505(b), is further amended by adding the language "or circuit court" after the language "chancery court every time it appears in the second sentence.
PART II. *Creation of the office of ombudsperson by statute*
A. The Office of Ombudsperson shall be created by statute within the Office of the Comptroller of the Treasury. The role of the Ombudsperson shall be to answer questions and provide information to public officials and the public, to collect data on sunshine law inquiries and problems, and provide educational outreach on both the Open Meetings and Open Records Laws.
An Advisory Committee on Open Government shall be created to provide guidance and advice for the Ombudsperson. The Advisory Committee shall consist of representatives from the public, including the press, and state and local government.
The Ombudsperson shall answer questions and issue informal advisory opinions as expeditiously as possible to any person, including local government officials, the general public and the media. State officials may continue to consult the Attorney General for such opinions. Any opinion issued by the Ombudsperson shall be a public record and shall be posted on a dedicated website.
B. The Ombudsperson shall be authorized to informally mediate and assist the resolution of issues concerning the open records law, and to collect data, where feasible, on issues concerning the open meetings act.
C. Any written comments or advisory opinions issued by the Ombudsperson may be admissible in a court of law.
D. The Ombudsperson and the Advisory Committee may review and provide written comments on any proposed legislation regarding the Open Meetings Laws or Open Records Laws.
E. The Ombudsperson and the Advisory Committee shall report their activities annually to the General Assembly and the Governor.
PART III. *Issues to be sent to the office of ombudsperson and the advisory committee for further study and review*:

A. Whether or not a statutory change should be made regarding imposing civil penalties upon a violation of the Open Meetings Law:
SECTION __. Tennessee Code Annotated, Title 8, Chapter 44, Part 1Error! Bookmark not defined., is amended by adding the following as a new section thereto:

§ 8-44-1__.

For each meeting proven to be held in violation of this part for one or more reasons, the court may impose a civil penalty on any defendant who knowingly and willfully violated this part. The maximum penalty for each meeting per defendant shall not exceed one thousand dollars ($1,000).

B. Whether or not the attorney-client privilege exception to the Open Meetings Law as described in *Smith County Education Assoc. v. Anderson*, 676 S.W.2d 328, (Tenn. 1984) should be placed in statute to reinforce the law as defined by the Supreme Court at this time.

C. With regard to § 10-7-504 whether or not to:

1. Require all new exemptions to the Open Records Law be placed in the body of this statute and move all current statutory exemptions, including those listed in §10-7-503, into this section;
2. Add an index that describes exemptions recognized by the Tennessee Supreme Court where the information in question can be specifically identified, such as law enforcement records pertaining to a specific "pending investigation" that would be discoverable (e.g. an incident or arrest reports);
3. Consider and develop procedures for the general assembly to follow for legislation creating new statutory exemptions. The procedures would balance the public necessity for openness with legitimate privacy concerns; anticipate unintended consequences and try and ensure that exemptions are not broader than necessary;
4. Make new statutory exemptions to the Open Records Law subject to a sunset review; and
5. Develop recommendations for a review of current exemptions that are vague, misunderstood or misconstrued with a goal toward making the exemptions as specific as possible to avoid misuse and abuse.

D. With regard to § 10-7-506 whether or not to:

1. Define "reasonable rules" as it relates to fees for copies of public records or providing public information that is stored in electronic form;
2. Give the person requesting an electronic copy of public information the option of choosing to receive it in any format in which it is maintained by the agency;
3. Make it clear that fees cannot be excessive nor can they be used to hinder access to public information and the statute should explain that "open to inspection" means the public cannot be charged to inspect;
4. Define "actual cost" as any actual and direct expense wherein an agency had to go outside for an Information Technology person to program a computer because some agencies have recently started to charge "actual cost" to inspect and copy public records, including full salary, benefits and Social Security;
5. Amend the statute to clarify that agencies cannot charge to redact information as part of routine requests to inspect public information with a different standard possibly for time-consuming, large volume requests;
6. Amend the statute to further explain and enforce §10-7-121 wherein the legislature gave agencies authority to store information "on computer or removable storage media... if the following standards are met: (A) Such information is available for public inspection, unless it is a confidential record according to law." The statute should be clear that if information is in a computer and the agency cannot allow public access through a computer terminal in a read-only format or because it contains exempt information it cannot charge to have an employee sit and retrieve the information from a computer solely to be inspected. The information should be otherwise provided in whatever format the requester asks, assuming it is maintained in that format, and without charge;
7. Require all purchases of computer hardware and software to include a provision that will make it easy and inexpensive to redact exempt information; and
8. Permit a requester to provide his or her own equipment to scan or copy public records.

E. With regard to § 10-7-121 & § 10-7-506(a) whether or not to:

1. Clarify language dealing with electronic records. The Supreme Court has noted that the use of electronic storage of records has diminished the difference between public records on paper and public information in a computer. The law should place both on the same footing by allowing a person to request and be given records in any format, including any searchable format if the records are kept in that format;

2. Adopt the Supreme Court's logic and rationale *(see Tennessean v. Electric Power Board, 979 S.W.2d 297 (Tenn. 1998)* that it does not make sense to store information in a computer for economy and efficiency of taxpayers and then charge the public extra to "extract" that information. The public should enjoy the same economies and efficiencies the government enjoys;
3. Require agencies to consider any cheaper alternative when asked to produce electronic records, including "data dumps" but could charge "actual direct cost" if they have to hire someone to do computer work; and
4. Review §10-7-121 that states an agency shall provide ability to inspect electronically-stored records and should not be allowed to charge for any method of inspection if they don't provide access.

STATUTE:
8-44-102. Open meetings — "Governing body" defined — "Meeting" defined. —
(a) All meetings of any governing body are declared to be public meetings open to the public at all times, except as provided by the Constitution of Tennessee.
(b) (1) "Governing body" means:
(A) The members of any public body which consists of two (2) or more members, with the authority to make decisions for or recommendations to a public body on policy or administration and also means a community action agency which administers community action programs under the provisions of 42 U.S.C. § 2790 [repealed]. Any governing body so defined by this section shall remain so defined, notwithstanding the fact that such governing body may have designated itself as a negotiation committee for collective bargaining purposes, and strategy sessions of a governing body under such circumstances shall be open to the public at all times;
(B) The board of directors of any nonprofit corporation which contracts with a state agency to receive community grant funds in consideration for rendering specified services to the public; provided, that community grant funds comprise at least thirty percent (30%) of the total annual income of such corporation. Except such meetings of the board of directors of such nonprofit corporation that are called solely to discuss matters involving confidential doctor-patient relationships, personnel matters or matters required to be kept confidential by federal or state law or by federal or state regulation shall not be covered under the provisions of this chapter, and no other matter shall be discussed at such meetings;
(C) The board of directors of any not-for-profit corporation authorized by the laws of Tennessee to act for the benefit or on behalf of any one (1) or more counties, cities, towns and local governments pursuant to the provisions of title 7, chapter 54 or 58. The provisions of this subdivision (b)(1)(C) shall not apply to any county with a metropolitan form of government and having a population of four hundred thousand (400,000) or more according to the 1980 federal census or any subsequent federal census;
(D) The board of directors of any nonprofit corporation which through contract or otherwise provides a metropolitan form of government having a population in excess of five hundred thousand (500,000) according to the 1990 federal census or any subsequent federal census with heat, steam or incineration of refuse;
(E) (i) The board of directors of any association or nonprofit corporation authorized by the laws of Tennessee that:
(a) Was established for the benefit of local government officials or counties, cities, towns or other local governments or as a municipal bond financing pool;
(b) Receives dues, service fees or any other income from local government officials or such local governments that constitute at least thirty percent (30%) of its total annual income; and
(c) Was authorized as of January 1, 1998, under state law to obtain coverage for its employees in the Tennessee consolidated retirement system.
(ii) The provisions of this subdivision (b)(1)(E) shall not be construed to require the disclosure of a trade secret or proprietary information held or used by an association or nonprofit corporation to which this chapter applies. In the event a trade secret or proprietary information is required to be discussed in an open meeting, the association or nonprofit corporation may

conduct an executive session to discuss such trade secret or proprietary information; provided, that a notice of the executive session is included in the agenda for such meeting.

(iii) As used in this subdivision (b)(1)(E):

(a) "Proprietary information" means rating information, plans, or proposals; actuarial information; specifications for specific services provided; and any other similar commercial or financial information used in making or deliberating toward a decision by employees, agents or the board of directors of such association or corporation; and which if known to a person or entity outside the association or corporation would give such person or entity an advantage or an opportunity to gain an advantage over the association or corporation when providing or bidding to provide the same or similar services to local governments; and

(b) "Trade secret" means the whole or any portion or phrase of any scientific or technical information, design, process, procedure, formula or improvement which is secret and of value. The trier of fact may infer a trade secret to be secret when the owner thereof takes measures to prevent it from becoming available to persons other than those selected by the owner to have access thereto for limited purposes;

(2) "Meeting" means the convening of a governing body of a public body for which a quorum is required in order to make a decision or to deliberate toward a decision on any matter. "Meeting" does not include any on-site inspection of any project or program.

(c) Nothing in this section shall be construed as to require a chance meeting of two (2) or more members of a public body to be considered a public meeting. No such chance meetings, informal assemblages, or electronic communication shall be used to decide or deliberate public business in circumvention of the spirit or requirements of this part.

7

Reverse Auction
Russell Lee, Finance Director, Lebanon

Problem:
The state, but not municipalities, is presently authorized to use the "reverse action" form of municipal purchasing.

Tennessee Code Annotated, section 12-3-704 allows both the state and its local governments to use electronic bidding, including sending out request for bids, but that statute clearly contemplates the traditional competitive bidding process where bidders submit sealed bids that are opened on a date and time certain. That statute also exempts small and minority businesses from using any aspect of the electronic bidding process. However, Tennessee Code Annotated, section 12-3-219 allows the Tennessee Department of General Services, but not local governments, to use the relatively new "reverse auction" competitive purchasing process, which contemplates open electronic bidding in which all bidders know each others bids and can lower their bids through the term of the bidding process. In theory, in many if not most, cases the "reverse auction" purchasing process results in lower bids than does the traditional sealed bids purchasing process. However, the exemption of small and minority businesses from the use of electronic bidding works to the disadvantage of such businesses in the "reverse auction" purchasing process. In addition, under that exemption it is difficult to see how all the bidders can be placed on the same plane of equality that is required by the Tennessee Supreme Court case of Leech v. Wright, 622 S.W.2d 87 (1981), which speaks of competitive bidding based under the traditional sealed bid process.

Proposed Remedy:
Tennessee Code Annotated, section 12-3-704 needs to be amended to:
1. Authorize local governments to use the "reverse auction" purchasing process;
2. Remove the exemption for small and minority businesses from the use of electronic bidding where the "reverse auction" type of competitive bidding is used.

Anticipated Benefits:
"Reverse auction" competitive bidding should result in significant savings on purchases by local governments. The removal of the exemption of small and minority businesses from using electronic bidding where the "reverse auction" form of bidding is used should do little, if any, damage to small and minority businesses, given the wide availability of computers in almost all businesses.

Additional Information:
12-3-219. Competitive reverse auction process. —

(a) For a purchase of goods and services under this chapter, the department of general services may purchase goods and services through a competitive reverse auction process that allows offerors to bid on specified goods or services electronically and adjust bid pricing during a specified time period. An award shall be made to the offeror determined to be the lowest responsible and responsive bidder at the close of the specified bid period.

(b) Policies and procedures concerning this procurement methodology, including the criteria, and the evaluation process shall be developed by the department of general services and approved by the board of standards.

(c) This section shall not apply to:

(1) Construction services; or
(2) Architectural or engineering services.

[Acts 2007, ch. 296, § 1.]

12-3-704. Electronic bidding, invitations to bid, requests for proposals and other solicitations. —

Notwithstanding any provision of law, rule or regulation to the contrary, state agencies and local governments may satisfy any requirement for mailing by distributing invitations to bid, requests for proposals and other solicitations electronically. In addition, state agencies and local governments may receive bids, proposals, and other offers electronically. In order to assure the fullest possible participation of small businesses and minority owned businesses, state agencies and local governments shall not require such small businesses and minority owned businesses to receive or respond to invitations to bid, requests for proposals, or other solicitations electronically.

[Acts 1999, ch. 382, § 3.]

Adequate Facilities Fees
Susan Stephenson, Councilwoman, Columbia

Problem:
Cities cannot continue to absorb all the expanding costs and expenses generated by new development. As certified city planners have told us, residential development costs cities much more in overhead for city services and infrastructure than what is collected through new property tax revenue. Developers should willingly agree to contribute to the community, and help pay for the development. Developers come in to make a profit, but they should also be "good neighbors" who understand that cities struggle now with providing services and infrastructure to their existing corporate city limits. With existing revenue shortfalls, how can developers expect cities to welcome new development when they are expected to shoulder all the burden of additional overhead and infrastructure costs? Long after developers have moved on to their next project, cities pay for years to come.

1) The chief Legislative Body (City Council) can initiate, regulate, and enforce Adequate Facilities fees and/or Impact Fees if and when they determine the need.

2) Municipalities must document and record how all fees initiated are expended and utilized.

3) The existing County Powers Act as it is written, is applicable only to cities with a metropolitan form of government and counties. Established city residents and property owners cannot be expected to shoulder the costs of city services and infrastructure needed for new development.

Proposed Remedy:
Municipalities should be empowered to initiate and enforce Adequate Facilities Fees and/or Impact Fees

Anticipated Benefits:
We cannot continue to look in the eyes of our constituents as say to them, "I have to keep increasing your property taxes, but it's not so that I can fix the streets that are falling apart in front of your homes, or to improve your city services or quality of life, it's so that we can cover the costs of all this new development!" There are those who say "Look at the investment the developer is making in this community," and to that I respond, "Look at the investment all these city residents and property owners have made in this community for the last 20, 30, 40, 50 years!" Elected city officials who serve the city on a daily basis, and who are directly accountable to the public should control growth and development, and they should have the authority here locally to budget and initiate revenue sources needed to support it.

Additional Information:
67-4-2901. Short title. —

This part shall be known and may be cited as the "County Powers Relief Act."

[Acts 2006, ch. 953, § 1.]

67-4-2902. Purpose of part. —

67-4-2903. Part definitions. —

As used in this part, unless the context otherwise requires:

(1) "Building" means any structure built for the support, shelter, or enclosure of persons, chattels, or movable property of any kind, including a mobile home. "Building" does not mean any structures used primarily for agricultural purposes;

(2) "Building permit" means a permit for development issued in the county, whether by a county, metropolitan or municipal government;

(3) "Capital improvement program" means a proposed schedule of future capital projects, listed in order of construction priority, together with cost estimates and the anticipated means of financing each project requiring the expenditure of public funds, over and above the annual local government operating expenses, for the purchase, construction, or replacement of physical assets;

(4) "County" means a county or metropolitan government;

(5) "County school facilities privilege tax" means a tax on new residential development as defined in this part;

(6) "Development" means the construction, building, erection, or improvement to land by providing a new building or structure that provides floor area for residential use;

(7) "Dwelling unit" means a room, or rooms connected together, constituting a separate, independent housekeeping establishment for owner occupancy, rental or lease on a daily, weekly, monthly or longer basis, physically separated from any other room, rooms or dwelling units that may be in the same building, and containing independent cooking and sleeping facilities;

(8) "Floor area" for residential development means the total of the gross horizontal area of all floors, including basements, cellars, or attics, that is heated or air-conditioned living space;

(9) "Governing body" means the county legislative body or metropolitan council;

(10) "Person" means any individual, firm, partnership, limited liability company, joint-venture, association, corporation, estate, trust, business trust, receiver, syndicate, or other group or combination acting as a unit;

(11) "Place of worship" means that portion of a building, owned by a religious institution that has property tax exempt status, that is used for worship services and related functions; provided, however, that a place of worship does not include buildings and portions of buildings that are used for purposes other than worship and related functions or that are intended to be leased, rented or used by persons who do not have a tax exempt status;

(12) "Public building" means a building owned by the state of Tennessee or any agency or political subdivision of the state of Tennessee, including, but not limited to, counties, metropolitan governments, municipalities, school districts or special districts, or the federal government or any agency of the federal government; and

(13) "Residential" means the development of any property for a dwelling unit or units.

67-4-2904. Residential development declared to be a locally taxable privilege. —

Engaging in the act of residential development within a county, except as excluded by this part, is declared to be a privilege upon which a county, by resolution or ordinance of its governing body, may levy a tax, subject to the conditions and limitations contained in this part. The resolution or ordinance shall be adopted by a two-thirds vote of the entire membership of the county legislative body at two (2) consecutive, regularly scheduled meetings.

The purpose of this part is to authorize counties to levy a privilege tax on persons and entities engaged in the residential development of property, in order to provide a county with an additional source of funding to defray the cost of providing school facilities to meet the needs of the citizens of the county as a result of population growth.

67-4-2905. Adoption of administrative guidelines, procedures, regulations and forms. —

After levying the tax, the county governing body shall, by resolution or ordinance adopted by majority vote, adopt administrative guidelines, procedures, regulations and forms necessary to properly implement, administer and enforce the provisions of this part.

67-4-2906. Application. —

This part shall not apply to development of:

(1) Public buildings;
(2) Places of worship;
(3) Barns or other outbuildings used for agricultural purposes;
(4) Replacement buildings or structures for previously existing buildings and structures destroyed by fire or other disaster;
(5) A building or structure owned by a nonprofit corporation that is a qualified 501(c)(3) corporation under the federal Internal Revenue Code; or
(6) A building or structure located in any census tract of the county that has been designated by the federal government as being eligible for federal incentives because of blight, economic distress or urban renewal, upon a proper finding by the county legislative body that the exemption is necessary to stimulate growth in these economically challenged areas.

67-4-2907. Criteria for levying tax. —

A governing body is prohibited from levying a tax pursuant to this part, unless the county meets one (1) or more of the following criteria:
(1) The county experienced a growth rate of twenty percent (20%) or more in total population from the 1990 federal census to the 2000 federal census, or the county experiences growth of twenty percent (20%) or more between any subsequent federal decennial censuses; or
(2) The county experienced a nine percent (9%) or more increase in population over the period from the year 2000 to 2004, or over a subsequent four-year period, according to United States census bureau population estimates.

67-4-2908. Tax based on the floor area of residential development. —

For the exercise of the privilege of development, a county may levy a tax based on the floor area of residential development. A county initially levying a tax under the authority granted by this part may levy the tax at a rate not to exceed one dollar ($1.00) per square foot on residential property. Whenever a county has levied a tax pursuant to this part or increased the rate of the tax, it may not increase the rate of the tax or levy an additional tax on the privilege of development for a period of four (4) years from the effective date of the tax or rate increase. After four (4) years from the date the county initially levies the tax or from the date of the last increase in the rate of the tax, the county legislative body may increase the rate of the tax by a percentage not to exceed ten percent (10%).

67-4-2909. Adoption of capital improvement program required. —

A governing body shall not levy a tax pursuant to this part, unless it has adopted a capital improvement program. The adopted capital improvement program may be amended by the governing body.

67-4-2910. Collection of tax. —

(a) Any tax levied pursuant to this part shall be collected in the following manner:
(1) At the time of application for a building permit for residential development, the municipal or county official issuing the permit shall compute the estimated tax liability for the county school facilities privilege tax, based upon the proposed square footage of the facility to be built and the current rate of the county's school facilities privilege tax. As a condition of receiving the permit,

the applicant shall sign a form indicating that the applicant recognizes the liability for the tax. The official shall keep one (1) copy of the form for the official's records and shall provide a copy to the applicant. If the permit is issued by a municipal building official, the official shall also forward a copy of the form within thirty (30) days of the issuance of the building permit to the county official or employee who has been designated by the county legislative body to collect the tax. As an alternative, the county and any municipality within the county may provide by interlocal agreement for the municipal building official to be designated as a collector of the tax and provide for a commission to be paid to the municipality for such services.

(2) The tax shall not be due until the earlier of one (1) year from the date of issuance of the building permit or thirty (30) days after the first transfer of title to the property being developed after the building permit is issued. If, after one (1) year from issuance of the building permit, the building or structure is not complete or title has not been transferred, the permit holder may, in lieu of paying the tax, request an extension for one (1) year. The permit holder may request a maximum of two (2) extensions. Extensions shall not be denied, if the permit holder makes a showing to the official responsible for collecting the tax that the building or structure is not complete.

(3) Once it becomes due, the tax shall be paid to the official or officials designated by the county governing body to collect the tax. At the time of payment, the official shall review the tax liability to determine whether the square footage of the completed building or structure corresponds to the initial estimated square footage in the building permit. The tax shall be computed using the actual square footage of the completed building or structure, but the rate of the tax shall be based upon the rate applicable at the time the permit was issued.

(4) The revenue from the tax shall be paid over to the county trustee within thirty (30) days for deposit, in accordance with § 67-4-2911.

(b) (1) If the tax is not paid by a permit holder within ninety (90) days of the due date, the official responsible for collection of the tax shall report this delinquency to the county's delinquent tax attorney. The delinquent tax attorney shall bring an action against the permit holder for the full amount of the tax, plus statutory interest and a penalty of fifty percent (50%) of the amount of tax owed. The compensation of the delinquent tax attorney for such services shall be determined by agreement between the county trustee and the delinquent tax attorney.

(2) No permit holder who owes delinquent school facilities taxes shall be eligible to receive a building permit for any other project in the county until such time as the delinquency, plus any penalties and interest, are paid in full.

67-4-2911. Remittance of taxes collected. —

The taxes collected pursuant to this part shall be remitted by the collector to the county or metropolitan government trustee, who shall place the tax proceeds in the fund or funds designated by the governing body, but the tax proceeds shall be used exclusively for the purpose of funding capital expenditures for education, including the retirement of bonded indebtedness, the need for which is reasonably related to population growth.

67-4-2912. Administrative procedure for review of tax decisions — Judicial review. —

Any county or metropolitan government levying a tax pursuant to this part shall provide, by resolution or ordinance, a procedure whereby any person aggrieved by the decision of any responsible official in administering this part may obtain review of the official's decision administratively. The result of the administrative decision shall be subject to judicial review in accordance with law.

67-4-2913. Preemption. —

After June 20, 2006, no county shall be authorized to enact an impact fee on development or a local real estate transfer tax by private or public act. In addition, this part shall be the exclusive authority for local governments to adopt any new or additional adequate facilities taxes on development. However, the provisions of this part shall not be construed to prevent a municipality

or county from exercising any authority to levy or collect similar development taxes or impact fees granted by a private act that was in effect prior to June 20, 2006, or from revising the dedicated use and purpose of a tax on new development from public facilities to public school facilities. A county levying a development tax or impact fee by private act on June 20, 2006, shall be prohibited from using the authority provided in this part so long as the private act is in effect.

[Acts 2006, ch. 953, § 1.]

Streamline Traffic Signal Approval
Michael Walker, City Manager, Brentwood

Problem:
Currently TDOT requires cities to operate and maintain traffic signals on State highways but continues to approve the installation of new traffic signals except for the larger cities in Tennessee. There is no consistent or written uniform policy for determining why larger cities can approve new or modified signal installations on state highways but other qualified cities are not allowed to do so. This leads to unnecessary confusion and delay in signal reviews and approvals particularly for mid-size cities with sufficient resources and expertise to carry out signal reviews and approvals according to the recognized technical guidelines - The Manual for Uniform Traffic Control Devices. (MUTCD). Under the current approach, there also appears to be inconsistency in the application of these technical standards for signal approvals between adjoining jurisdictions (where approval is delegated to the local government) and possibly different application of the MUTCD standards by TDOT across the State of Tennessee. A law should be proposed to delegate traffic signal approvals on state highway to any Tennessee cities with a population over 25,000. This population number could be lower but at this point, I am comfortable that cities above 25,000 have the technical expertise and resources to do the program. Interested cities would be required to formulate a traffic signal approval plan that meets the minimum standards in the MUTCD and have on staff or by contract, a qualified licensed Professional Engineers (in traffic engineering) to review and approval traffic signal proposals for the City. This legislation should be elective. Interested and eligible cities could choose to adopt this local option to better streamline all signal activity within their jurisdiction or continue under the current TDOT program. An alternative approach would be to require TDOT to take over all signal operations and maintenances on State highways from the local government, thereby providing uniform accountability for all aspects of traffic signals. Ironically, this critical aspect may be the only responsibilty on a state highway that TDOT delegates responsibility to a local government. Also, I am not aware of any ongoing TDOT program to inspect state highway signals to verify the locality's effort at proper operation and maintenance of the signals.

Proposed Remedy:
A law should be proposed to delegate traffic signal approvals on state highway to any Tennessee cities with a population over 25,000. This population number could be lower but at this point, I am comfortable that cities above 25,000 have the technical expertise and resources to do the program.

Anticipated Benefits:
More uniformity and consistency in the approval of traffic signals between nearby jurisdictions will eliminate confusion among the public on why there are different standards for signal approvals on state highways. The consolidated approach will streamline the approval process at one place and provide greater accountability to the public for signal decisions. It could also save limited resources for TDOT which could be redirected to more improtant state priorities.

Criteria for a Referendum on Metro Government
Kevin Helms, City Administrator, Fayetteville

Problem:
The criteria that must be met to hold a referendum on Metro Government is too lenient. This is especially true after an initiative has been defeated at the polls on at least one occasion. In our community (Fayetteville/Lincoln County), a vote was held four years ago and defeated by a 2 to 1 vote. The issue was voted on again this year and the issue was defeated 3 to 1. However, the proponents of this plan have promised to bring the issue up every three years, as allowed by law. The number of signatures needed to call for a vote in Lincoln County was approximately 1,000. They were barely able to meet this requirement. In addition to the inconvenience of the process to those who volunteer, there is also a substantial cost to the County. It is a waste of time and money to continue to vote on an issue that is soundly defeated each time. If there is opposition to the number of signatures being increased to call for an initial vote on the issue in a community, it could at least be increased for subsequent votes. Municipalities would not have to repetitively address an issue that the community does not want.

Proposed Remedy:
The number of signatures needed to call for a vote and/or the length of time between votes should be increased.

Anticipated Benefits:
It allows us to focus on serving our citizens, rather than proving to the public the need for cities to exist outside of Metro Government. It also alleviates the need to continue to call citizens forward to serve on the volunteer Metro Charter Commission when they know it is a waste of their time. As a secondary benefit, it would also eliminate the need for a county to repeatedly fund a process that can cost up to $50,000 and has proven to be unwanted by the citizens of the city and county.

Additional Information:
T. C. A. § 7-2-101

West's Tennessee Code Annotated Currentness
Title 7. Consolidated Governments
Metropolitan Government
Chapter 2. Metropolitan Government--Adoption and Provisions of Charter
§ 7-2-101. Charter commission; methods of creation

The initial step in a consolidation under this chapter shall be the creation of a metropolitan government charter commission, sometimes called "charter commission" in this chapter, by one (1) of the following methods:

(1) The commission may be created by the adoption of a consolidation resolution by the governing body of a county and by the adoption of a substantially similar resolution by the governing body of the principal city in the county;

(A) The resolution may be adopted by a majority vote of the members of such governing body present and voting, a quorum being present, at any regular meeting or at any meeting specially called to consider the resolution. The resolution shall provide that a metropolitan government

charter commission is established to propose to the people the consolidation of all, or substantially all, of the governmental and corporate functions of the county and its principal city and the creation of a metropolitan government for the administration of the consolidated functions;
(B) The resolution shall either:
(i) Authorize the county mayor to appoint ten (10) commissioners, subject to confirmation by the county governing body, and authorize the mayor of the principal city to appoint five (5) commissioners, subject to confirmation by the city governing body; or
(ii) Provide that an election shall be held to select members of the metropolitan government charter commission;
(C) It is the legislative intent that the persons appointed to the charter commission shall be broadly representative of all areas of the county and principal city and that every effort shall be made to include representatives from various political, social, and economic groups within the county and principal municipality;
(D) Promptly after the adoption of the consolidation resolution by the governing body of a county, its clerk shall certify the fact of such adoption with a copy of the resolution to the clerk of the governing body of the principal city, and promptly after the adoption of a consolidation resolution by the governing body of the principal city, its clerk shall certify the fact of such adoption to the clerk of the governing body of the county;
(E) When the resolutions of the governing bodies of the county and of the principal city shall provide for the appointment of commissioners of the county and city, the metropolitan government charter commission shall be created and duly constituted after appointments have been made and confirmed;
(F) When the resolutions provide for an election to select members of the metropolitan government charter commission, copies of the resolution shall be certified by the clerks of the governing bodies to the county election commission, together with certificates as to the fact and date of adoption, and then an election shall be held as provided in § 7-2-102;
(G) In any county having a metropolitan form of government in existence on January 1, 1977, the metropolitan mayor or county mayor is authorized to appoint five (5) commissioners, subject to confirmation by the county governing body, and the mayor of the principal city is authorized to appoint five (5) commissioners, subject to confirmation by the city governing body;
(H) When the consolidation resolutions provide for the appointment of members of the metropolitan government charter commission, such appointments shall be made within thirty (30) days after the adoption of the resolution by the last governing body to do so, whether of the county or the principal city;

(2) In counties having a board of county commissioners, a charter commission may be created by the adoption of a consolidation resolution by either the governing body of the county or the board of county commissioners and by the adoption of a substantially similar resolution by the governing body of the principal city in the county;

(A) The resolution may be adopted by majority vote of the total number of members to which such governing body is entitled, or by a majority of the members of the board of county commissioners, at any regular or called meeting of such county governing body or board of county commissioners;
(B) The resolution and the procedures concerning its adoption and certification and the appointment or election of members of the charter commission pursuant thereto shall be governed by the provisions of subdivision (1), except that if members of the charter commission are to be appointed, the resolution shall authorize the county mayor to appoint six (6) commissioners, and the board of county commissioners to appoint six (6) commissioners, and the mayor of the principal city to appoint eight (8) commissioners;
(i) The commissioners appointed by the mayor of the principal city shall be made subject to confirmation by the city governing body, and the commissioners appointed by the county mayor and by the board of county commissioners shall be made subject to confirmation by whichever of the county bodies first adopts a consolidation resolution, unless both bodies adopt a consolidation resolution on the same day, in which case, the commissioners appointed by the county mayor

shall be confirmed by the county governing body and the commissioners appointed by the board of county commissioners shall not be subject to confirmation;
(ii) It is the legislative intent that the persons appointed shall be broadly representative of all areas of the county and principal city and that every effort shall be made to include representatives from various political, social and economic groups within the county and principal municipality;

(3) The charter commission may be created in any county in the manner prescribed by private act of the general assembly; or

(4) The commission may be created upon receipt of a petition, signed by qualified voters of the county, equal to at least ten percent (10%) of the number of votes cast in the county for governor in the last gubernatorial election;

(A) The petition shall be delivered to the county election commission for certification. After the petition is certified, the county election commission shall deliver the petition to the governing body of the county and the governing body of the principal city in the county. The petition shall become the consolidation resolution of the county and the principal city in the county. The resolution shall provide that a metropolitan government charter commission is established to propose to the people the consolidation of all, or substantially all, of the government and corporate functions of the county and its principal city, and the creation of a metropolitan government for the administration of the consolidated functions;
(B) The resolution shall either:
(i) Authorize the county mayor to appoint ten (10) commissioners, subject to confirmation by the county governing body, and authorize the mayor of the principal city to appoint five (5) commissioners, subject to confirmation by the city governing body; or
(ii) Provide that an election shall be held to select members of the metropolitan government charter commission; provided, that if the governing body of the county and the governing body of the principal city cannot agree on the method of selecting members of the metropolitan government charter commission within sixty (60) days of certification, then an election shall be held to select members of the metropolitan government charter commission as provided in § 7-2-102;
(C) It is the legislative intent that the persons appointed to the charter commission shall be broadly representative of all areas of the county and principal city and that every effort shall be made to include representatives from various political, social, and economic groups within the county and principal municipality;
(D) When such resolution provides for the appointment of commissioners of the county and city, the metropolitan government charter commission shall be created and duly constituted after appointments have been made and confirmed;
(E) When the resolution provides for an election to select members of the metropolitan government charter commission, copies of the resolution shall be certified by the clerks of the governing bodies to the county election commission, and then an election shall be held as provided in § 7-2-102;
(F) When the consolidation resolution provides for the appointment of members of the metropolitan government charter commission, the appointments shall be made within thirty (30) days after the resolution is submitted to the governing bodies of the county and the principal city; and
(G) If the referendum to approve consolidation fails, another commission may not be created by petition for three (3) years.

Mandatory Review/Inspection of Gates and Barriers
Rick Gregory, Planning Dir. Goodlettsville

Problem:
PC1008 requires establishment of regulations for installation or replacement of security gates or barriers, requires inspection and requires radio controlled operation of all security gates and barriers to multi-family residential, commercial or industrial gated communities and facilities served by drives or access roads 24 feet wide or greater.

Proposed Remedy:
Remove mandatory review and inspection of installation or replacement gates or barriers.

Anticipated Benefits:
Avoidance of potential liability issues associated with installation, operation and maintenance of security gates and barriers.

Background:
Public Chapter No. 1008 PUBLIC ACTS, 2008
PUBLIC CHAPTER NO. 1008
HOUSE BILL NO. 649
By Representatives Mike Turner, Maddox, Hardaway
Substituted for: Senate Bill No. 1382
By Senator Haynes
AN ACT to amend Tennessee Code Annotated, Title 5; Title 6; Title 7; Title 13 and Title 68, relative to secured access gate systems.
BE IT ENACTED BY THE GENERAL ASSEMBLY OF THE STATE OF TENNESSEE:
SECTION 1. Tennessee Code Annotated, Title 13, is amended by adding Sections 2 through 8 of this act as a new chapter.
SECTION 2. The provisions of this act shall apply to any gated facility or community, whether residential, commercial or industrial, approved for or constructed after the effective date of this act and the installation of any new or replacement security gate or barrier at any existing gated facility or community after the effective date of this act.
SECTION 3. As used in this act, unless the context otherwise requires:
(1) "Access road" means a vehicular access roadway greater than or equal to twenty-four (24) feet in width;
(2) "Authority" means a governing body identified in Section 4;
(3) "Gated facility or community" means a multifamily residential property or commercial or industrial development or compound that has a security gate or barrier to block the entrance to the facility or community from a public street to a private street, parking lot or driveway of such facility or community;
(4) "Security gate or barrier" means a gate or barrier, electrically operated, that controls the passage of authorized vehicles and persons from a public street to access roads, driveways or parking lots of the gated facility or community;
(5) "Driveway" means a vehicular access roadway less than twenty-four (24) feet in width and serving no more than two (2) single-family dwellings;
(6) "Radio operated controller" means a device used to operate a security gate or barrier that is equipped with a radio receiver capable of receiving signals from a police department, sheriff's department (if the gated facility or community is in the county), fire department, utility and emergency medical services' radio transceivers which allow emergency responders and other necessary on-duty employees to open the security gate or barrier or blocking

device by use of such equipment.
SECTION 4. The following authorities, as applicable, shall be responsible for reviewing all plans for the installation or replacement of security gates or barriers at gated facilities or communities to ensure that each gated facility or community complies with the provisions of this act,:
(1) The regional planning commission, created pursuant to title 13, chapter 3;
(2) The municipal planning commission designated as a regional planning commission, created pursuant to title 13, chapter 3;
(3) A community planning commission created pursuant to title 13, chapter 3;
(4) The municipal planning commission, created pursuant to title 13, chapter 4;
(5) County or municipal zoning boards, created pursuant to title 13, chapter 7; and
(6) The county or municipal legislative body if none of the agencies identified in subdivision (1) one through (5) has been created within the county or municipality, as applicable; provided that such legislative bodies shall identify an official to review all plans for the installation or replacement of security gates or barriers at gated facilities or communities within their jurisdictions for compliance with this act and report the findings of the official to the legislative body for its action.
SECTION 5.
After the effective date of this act, prior to the installation or replacement of a security gate or barrier at a gated facility or community, the developer or owner shall obtain a security gate or barrier permit from the authority having jurisdiction in the area where the security gate or barrier is to be replaced or installed. A permit shall only be issued for a security gate or barrier meeting the requirements of this act. Prior to any changes, alterations or blocking of private streets, plans detailing such change accompanied by drawings, shall be submitted to the authority having jurisdiction over the gated facility or community for approval. A county or municipal building or codes inspector shall inspect all such installations. Such inspections of security gates or barriers shall be conducted at the same time as other inspections of the gated facility or community are performed by a county or municipal building or codes inspector.
SECTION 6. All security gates or barriers shall be equipped with a radio operated receiver/controller capable of receiving signals from a police department, sheriff's department (if the gated facility or community is in the county), fire department, utility and emergency medical services' radio transceivers serving the gated facility or community which allow emergency responders and other necessary on-duty employees to open the security gate or barrier by use of such equipment.
All security gates or barriers must meet policies deemed necessary by the authority having jurisdiction over the gated facility or community for rapid, reliable, and mutual aid access.
Such equipment shall be furnished, installed and maintained by the gated facility or community that is served by such equipment.
SECTION 7.
(a) The maintenance and upkeep of any security gate or barrier shall be the sole responsibility of the developer, owner or any duly incorporated and active association having jurisdiction of the gated facility or community.
(b) Inoperative security gates or barriers shall be repaired immediately. Inoperative gates shall be locked in the open position until repairs are made. Abandoned gates shall be permanently locked in the open position.
SECTION 8. The party or parties controlling the operation and maintenance of the security gate or barrier shall be liable for any damages caused by the improper operation of the security gate or barrier.

SECTION 9. This act shall take effect upon becoming a law, the public welfare requiring it.
APPROVED this 22nd day of May 2008

Costs of Collection Added to Amounts Collected
City of Chattanooga

Problem:
Some cities are reluctant to enter into contracts with collection agencies to collect delinquent accounts such as unpaid utility accounts and various unpaid fees and fines, due to the percentage of such delinquent amounts which the collection agency may claim. It is unclear whether the costs of collection may be added to the delinquent amounts collected by the agency, in which case the city may receive the full amount of funds owed to the city. There is no clear statutory authority to add such costs to the accounts collected in contracts between cities and collection agencies, so there is some question about whether or not cities have such authority. The following language is suggested, which may be added as new paragraph (d) of T.C.A.§ 9-1-108: It is lawful for municipalities (and counties?) to enter into contracts with collection agencies for the collection of delinquent accounts, including but not limited to, accounts for unpaid utility services, unpaid permit fees, and any other fines and fees owed to such cities. This section does not apply to unpaid taxes, the collection of which is controlled by Title 67. Contracts entered into with collection agencies may provide that the costs of collection be added to the accounts collected, so that the city may be paid in full when the account is satisfied. After July 1, 2009, cities entering into contracts with collection agencies which require that the costs of collection be added to the amounts owed shall provide notice to debtors that they will be responsible for paying the costs of collection for unpaid accounts, either through ordinance or mail.

Proposed Remedy:
Amend T.C.A.§ 9-1-108 to provide clear authority to enter into contracts with collection agencies with clauses providing that costs of collection will be added to the amounts collected.

Anticipated Benefits:
Such language could result in cities retaining those funds which would otherwise be paid to collection agencies. Cities acting under this section could be paid in full those amounts owed on delinquent accounts without having to pay a percentage to collection agencies.

Additional Information:
T.C.A. 9-1-108. Collection of funds on behalf of the state or local government — Acceptance of checks or money orders — Acceptance of credit or debit cards. —

(a) It is lawful for any municipal, county or state officer to receive, in payment of any public taxes, licenses, fines, fees or other moneys collected, checks or money orders made payable to the appropriate municipal official, county officer or to the "State of Tennessee." If a check or money order so received is not duly paid, the person by whom such check or money order has been tendered shall remain liable for the payment of the tax, license, fee or other obligation, and for all legal penalties and/or interest, to the same extent as if such check or money order had not been tendered.

(b) It is lawful for any public official who collects funds on behalf of the state or any local government to receive checks in such public official's official capacity made payable either to the individual public office or to the individual person's name who holds such public office; provided, that it is unlawful for any such public official to instruct the public to make such checks payable to the individual person's name who holds such public office on any notice sent to the public to collect such funds. The provisions of this subsection apply only to any county with a

metropolitan form of government and are controlling if in conflict with any county or local ordinance to the contrary.

(c) (1) It is lawful for any municipal or county entity or officer to receive payment by credit card or debit card for any public taxes, licenses, fines, fees or other moneys collected by such municipal or county entity or officer.

(2) As used in this subsection, unless the context otherwise requires:

(A) "Credit card" has the same meaning as defined in § 47-22-101;

(B) "Debit card" has the same meaning as defined in § 39-14-102(3); and

(C) "Municipal or county entity" includes, but is not limited to, a municipality, county, metropolitan government, utility district, board, commission or authority created or authorized by general or local law.

(3) Any municipal or county entity or officer collecting payment by credit card or debit card pursuant to the provisions of this subsection shall set and collect a processing fee in an amount that is equal to the amount paid the third party processor for processing the payment. However, the processing fee shall not be set in an amount that exceeds five percent (5%) of the amount of the payment collected by credit card or debit card. Such processing fee may be waived by approval of the governing body.

(4) If a payment by credit card is not honored by the credit card company issuing the card, or if a payment by a debit card is not honored by the entity on which the funds are drawn, the municipal or county governmental entity or officer may collect a service charge from the person who owes the municipal or county tax, fee, fine, penalty, interest or other charge, for processing the transaction. The amount of the service charge shall be the same amount as the fee charged for the collection of a check drawn on an account with insufficient funds; provided, this service charge shall not apply nor be collected if an electronic device is used to conduct the transaction, the card and card holder are present, and the officer learns of the declination of the credit card or debit card at the time the transaction is processed.

(5) [Deleted by 2001 amendment.]

(6) The municipal or county entity or officer collecting funds through payment by a credit card or debit card shall state on any notice to the person owing the tax, fine, fee or other money either the percentage of the processing fee for use of a credit card or debit card or the actual fee imposed for the use of a credit card or debit card.

(7) [Deleted by 2001 amendment.]

[Acts 1969, ch. 303, § 1; T.C.A., § 9-108; Acts 1989, ch. 480, § 1; 1992, ch. 962, § 1; 2000, ch. 706, § 1; 2001, ch. 348, §§ 1-3.]

STATE OF TENNESSEE
OFFICE OF THE
ATTORNEY GENERAL
PO BOX 20207
NASHVILLE, TENNESSEE 37202
April 24, 2006
Opinion No. 06-075
Constitutionality of Passing On Cost of a Collection Agent

QUESTION

Would a municipal court that assesses a monetary sanction that consists of a fine less than fifty dollars and a collection cost, both of which combine to equal more than fifty dollars, violate Article VI § 14?

OPINION

No. Because the cost of collection is remedial and not punitive in nature, any amount collected would not be counted toward the fifty dollar maximum allowed by Article VI § 14 of the Tennessee Constitution.

ANALYSIS

Article VI § 14 of the Tennessee Constitution states: "[n]o fine shall be laid on any citizen of this State that shall exceed fifty dollars, unless it shall be assessed by a jury of his peers[.]" In City of Chattanooga v. Davis, the Tennessee Supreme Court articulated the standard for determining whether an assessment is subject to the fifty dollar maximum. 54 S.W.3d 248 (2001). In Davis, the Court stated that the Fifty-Dollar Fine Clause does not apply to assessments in excess of fifty dollars that are not punitive in nature. Id. at 259.

The Court then iterated a test for whether or not an assessment was punitive. The Court stated that a monetary assessment is punitive in nature if: 1) the legislative body that enacted the assessment primarily intended for the sanction to punish the offender; or 2) despite evidence of some remedial and not punitive intent, the assessment is shown by the "clearest proof" to be so punitive in its actual purpose or effect that it cannot be reasonably considered to be remedial. Id. at 264. In explaining this test the Court stated that, if the legislative body intended the assessment to be punitive, the inquiry ends there and the fifty dollar maximum applies. Id. If, however, it appears the assessment was intended to be remedial, the Court must still look at the second prong of the test.
Id. If the assessment was intended to be remedial but does not actually serve a remedial purpose, then it must comply with the fifty dollar limit. Id. at 265.

In Dickson v. Tennessee, the Court of Appeals of Tennessee, when analyzing the Davis decision, stated, "[a]s we understand the Supreme Court's analysis, the only way a fixed, determinate fine can be considered remedial is when it bears some relationship to the harm caused by the violation, compensates the state for the costs of enforcement, or requires the wrongdoer to disgorge ill-gotten gains." 116 S.W.3d 738, 744 (2003).

Here, the proposed bill would allow courts to assess the cost of collecting a fine in an amount not to exceed forty percent of the fine. Because the stated/intended purpose of this assessment is not punitive in nature, and this assessment is directly related to the cost to the court to collect the fine, it is remedial in nature and exempt from the Fifty-Dollar Fine Clause. The collection costs assessed are intended to compensate the state for the costs of enforcement, and as such, would not count toward the fifty dollar maximum.

PAUL G. SUMMERS
Attorney General

MICHAEL E. MOORE
Solicitor General

WILLIAM N. HELOU
Assistant Attorney General

Requested by:
Joe F. Fowlkes
State Representative
32 Legislative Plaza
Nashville, TN 37243-0165

Board and Commission appointments and term limits
Susan Stephenson, Councilwoman, Columbia

Problem:
Board and Commission appointees are presently nominated by the Mayor, and there are no established term limits for these appointments. One individual (the Mayor) can just arbitrarily select anyone he chooses (for boards and commissions) without any discussion or merit presented to the City Council, and the Mayor can just continue to reappoint them term after term, as long as he wishes. They can end up serving for 10, 15, 20 years or more! It can set up a continuous political monopoly.

Proposed Remedy:
1) Any member of the chief legislative body (City Council) can nominate candidates for Board and Commission appointments.
2) Following discussion, City Council members select Board and Commission appointments by majority vote.
3) Board and commission members' terms cannot exceed and will be limited to a maximum of 2 consecutive or 2 non-consecutive terms.

No one elected official should be able to continuously select Board and Commission members, essentially controlling the composition of those Boards and Commissions indefinitely. No individual should be allowed to serve on a Board or Commission for 10, 20, 30 years! Perpetual political appointments must be prevented. Qualifications and experienced nominees can bring to the Boards and Commissions should be discussed by City Council members before a vote takes place. Times change, and, consequently, new, fresh minds with progressive vision can be a tremendous asset to municipalities.

Public Notice
Royce Davenport, Mayor, McMinnville

Problem:
Generally, the statutes require adequate public notice of any meetings of the municipal governing body or its boards, and commissions. The courts have determined that such notice must be published timely and in advance of the meeting and in a place where it can be seen by the community.

However, there are a number of statutes that require certain types of notices to be published in a "newspaper of general circulation." In each instance, the specific statutory requirements are to be completed in addition to the general requirements.

Coordinating statutory notice requirements with newspaper deadlines is often difficult and results in important governmental business being delayed. In addition, the costs associated with publishing the required information in a newspaper continues to escalate.

With the increase in the availability of Internet access across the state, it seems it is time the statute recognizes the convenience and cost savings offered via government Web sites.

Proposed Remedy:
Amend the statutes to provide the option of posting notice on an official government Web site

Anticipated Benefits:
Make information more readily available to citizens and reduce costs to taxpayers.

Additional Information:
Tennessee Code Annotated defines a "newspaper of general circulation" as a publication bearing a title or name, regularly issued at least as frequently as once a week for a definite price, having a second class mailing privilege, being not less than four (4) pages, published continuously during the immediately preceding one-year period, which is published for the dissemination of news of general interest and is circulated generally in the political subdivision in which it is published and in which notice is to be given. In any county where a publication fully complying with this definition does not exist, the state coordinator of elections is authorized to determine the appropriate publication to receive any required election notice. A newspaper which is not engaged in the distribution of news of general interest to the public, but which is primarily engaged in the distribution of news of interest to a particular group of citizens, is not a "newspaper of general circulation"

<u>Municipalities are required to publish notice in a newspaper of general circulation in the following instances</u>:

6-2-103. Annual operating budget and budgetary comparisons — Publication. —
6-18-103. Right to adopt city manager form — Incorporation within specified distances from existing cities. —
6-18-104. Election to adopt city manager form. —

6-20-218. Publication of penal ordinances — Effective date. —
6-30-104. Procedure for adoption or surrender of charter. —
6-30-106. Election to adopt city manager form — Publication of notice — Applicability.
6-33-112. Official city newspaper. —
6-51-102. Annexation by ordinance. —
6-51-104. Resolution for annexation by referendum — Notice. —
6-51-108. Rights of residents of annexed territory — Plan of service and progress report.
6-51-301. Utility services other than gas or telephone. —
6-54-111. Appropriation of funds for nonprofit organizations. —
6-54-123. Personnel policies. —
6-54-508. Adoption of municipal code. —
6-54-509. Notice of adoption of code. —
6-56-104. Audit as public record — Publication. —
6-56-206. Notice and hearing on proposed budget. —
6-58-106. Urban growth boundaries — Proposal — Hearing — Rural areas. —
6-58-112. New municipalities — School systems — Property tax — Incorporation election. —
7-21-204. Meetings — Preparation and filing of proposed charter — Action by legislative bodies — Publication of proposed charter. —
7-32-101. Chapter definitions — Powers of municipalities. —
7-32-105. Notice of ordinance and hearing of objections. —
7-33-303. Resolution for improvement — Contents — Publication — Notice.
7-33-305. Construction bids — Amount of bond issue — Performance bond — When bids binding — Construction by municipality's own forces. —
7-51-701. Automobile graveyards or junkyards — Licensing and control. —
7-52-602. Business plan — Public notice and hearing — Referendum. —
7-53-303. Issuance of bonds — Restrictions on payment — Delivery — Additional issues — Redemption. —
7-53-312. Preparation and submission of economic impact plan. —
7-60-203. Issuance of bonds and notes. —
7-82-109. Water utility system operated by county — Transfer to utility district — Procedure. —
7-82-307. Commissioners — Numbers — Terms — Vacancies — Election of commissioners. —
7-82-401. Audit — Accounting manual — Books and records. —
7-82-402. Protest of water rates — Adjustment of complaints — Consumer information records — Fire protection. —
7-84-205. Notice of hearing. —CENTRAL BUSINESS IMPROVEMENT DISTRICT
7-84-409. Assessment roll and schedule of damages — Filing — Open to public — Hearings on assessments and damages — Notice. —
7-87-104. Creation — Hearings —Resolutions — Joint port authorities. —
7-87-109. Bond issuance. —
9-21-203. Sale of general obligation bonds — Notices. —
9-21-304. Initial revenue bond resolution. —
9-21-609. Method of sale of twelve-year capital outlay notes. —
9-21-910. Sale of general obligation refunding bonds — Notices — Agreement to sell. —
9-21-912. Notice of refunding. —

Permission for Utility Extension
Mark Johnson, City Manager, Alcoa

Problem:
T.C.A. 7-34-105 specifies that municipalities cannot extend utility lines into areas that do not lie within their legal boundaries without permission from the governmental entity that has jurisdiction over the expansion area. This law dates back to the 1930s and conflicts with T.C.A. 9-21-107 (2), which gives municipalities the automatic authority to extend utility lines into areas within a twenty (20) mile radius of the territorial boundaries of the municipality.

Proposed Remedy:
Introduce legislation that deletes the provisions of T.C.A. 7-34-105 (2) and revises T.C.A. 9-21-107 so that the language is consistent with PC 1101.

Additional Information:
Deleting the antiquated statutory language requiring municipalities to obtain permission from other governmental entities prior to extending utility lines and making utility expansion authority consistent with PC 1101 will enable municipalities to adequately plan for growth and providing services to citizens.

BACKGROUND
1. **T.C.A. 7-34-105:**
No municipality shall construct public works wholly or partly within the corporate limits of another municipality, except with the consent of the governing body of such other municipality. [Acts 1935 (E.S.), ch. 33, § 13; C. Supp. 1950, § 4406.54 (Williams, § 4406.46); T.C.A. (orig. ed.), § 6-1305.]

2. **T.C.A. 9-21-107 (2):**
9-21-107. Powers of local governments. —
All local governments have the power and are authorized, either singly or jointly with any one (1) or more other local governments, local government instrumentalities, the state, or a state or federal agency or jointly with one (1) or more of the above, to:

(1) Engage in the construction of any public works project which may be constructed within or without the local government, or partially within and partially without the local government. However, no local government shall engage in the construction of a public works project wholly or partly within the legal boundaries of another local government except with the consent of the governing body of the other local government; provided, that any county or metropolitan government may construct a public works project within a municipality within the county or metropolitan government without the permission of the governing body of the municipality;

(2) Operate and maintain any public works project for its own purpose or for the benefit and use of its inhabitants and, in the case of municipalities, also to operate and maintain such public works project for the benefit and use of the

municipality and persons, firms and corporations therein and persons, firms and corporations, including municipal corporations, which are situated or whose residences or places of business are situated outside the territorial boundaries of the municipality but within the state and within a radius of twenty (20) miles from the territorial boundaries of the municipality; provided, that a joint project of any local government may, by agreement of the joint participants be operated or maintained, or both, by the local government itself, or by any one (1) of the other joint participants, or jointly by the local government and any one (1) or more

(3) (A) Contract debts for the construction of any of the joint participants, or jointly by any of the joint participants other than the local government; public works project or for the local government's share of the cost of any joint public works project;

(B) Contract debts in order to make grants, donations, reimbursements or loans to one (1) or more local governments, local government instrumentalities, or utility districts for the construction of any public works project;

(C) Borrow money;

(D) Issue bonds or notes to finance such construction, grant, donation, reimbursement or loan;

(E) Provide for the rights of the holders of such bonds or notes; and

(F) Secure such bonds or notes as hereinafter provided;

(4) Pledge the full faith, credit and unlimited taxing power of the local government as to all taxable property in the local government or a portion of the local government, if applicable, to the punctual payment of the principal of and interest on the bonds or notes issued to finance any public works project, except bonds or notes and the interest thereon payable exclusively from revenues of a public works project;

(5) In the case of a county or metropolitan government which contains within its boundaries a special school district and/or incorporated city or town maintaining a public school system separate from the county or metropolitan government public school system, the tax pledge authorized by subdivision (4), when pledged to the payment of bonds or notes issued to finance the construction of public schools of the county or metropolitan government serving outside the territorial limits of such special school district and/or incorporated city or town, may be a pledge of taxes to be levied only upon taxable property within that portion of the county or metropolitan government lying outside the territorial limits of such special school district and/or incorporated city or town;

(6) In the case of a county or metropolitan government which contains within its boundaries an incorporated city or town which constructs and maintains its streets, avenues, alleys and other highways separate from the county or metropolitan government, the tax pledge authorized by subdivision (4), when pledged to the payment of bonds or notes issued to finance the construction of streets, avenues, alleys and other highways of the county or metropolitan government lying outside the territorial limits of such incorporated city or town may be a pledge of taxes to be levied only upon taxable property within that portion of the county or metropolitan government lying outside the territorial limits of such incorporated city or town;

(7) Assess, levy and collect ad valorem taxes on all taxable property within the local government or a portion of the local government, if applicable, sufficient to pay the principal of and interest on the bonds or notes issued to finance any public works project, except bonds or notes and the interest thereon payable exclusively from revenues of a public works project;

(8) Fix, levy and collect fees, rents, tolls or other charges for the use of or in connection with any public works project and, in the event any agreements with holders of bonds or notes shall have been made as hereinafter provided, to fix, levy and collect such fees, rents, tolls and other charges in accordance with and subject to such agreements. Such fees, rents, tolls and other charges may also include any revenues derived by a local government from a lease, agreement or contract with any other local government, local government instrumentality, the state, or state or federal agency for the use of or in connection with a public works project. The power to fix, levy, and collect such fees, rents, tolls, or other charges includes the power to impose charges for the privilege of parking motor vehicles in or upon any on-street or off-street parking facilities, and the power to facilitate the collection of such parking fees or other charges by the use of parking meters;

(9) Pledge all or any part of the fees, rents, tolls, or other charges received or receivable by the local government from any public works project or projects then existing or thereafter to be constructed, including also any revenues derived or to be derived by a local government from a lease, agreement or contract with any other local government, local government instrumentality, the state, or a state or federal agency for the use of or in connection with such public works project or projects, to the payment of all operating expenses of the public works project or projects, to the punctual payment of the principal of and interest on bonds or notes issued to finance such public works project or projects, or any other public works project or projects, or if the governing body of the local government shall by resolution so request, payments to the local government in lieu of ad valorem taxes on the property constituting such public works project or projects, not to exceed the amount of taxes payable on privately owned property of similar nature, and to covenant against thereafter pledging any such fees, rents, tolls, or charges to any other bonds or notes or any other obligations of the local government;

(10) Acquire by purchase, gift or the exercise of the right of eminent domain, to lease as lessor or lessee, and to hold, dispose of, and convey any property, real or personal, tangible or intangible, or any right or interest in any such property, in connection with any public works project, whether or not subject to mortgages, liens, charges or other encumbrances, and to construct any public works project subject thereto. In the acquisition of public works projects, no governing body shall have the right to exercise the power of eminent domain with respect to real or personal property which has been dedicated to a public use, or which is at the time being so used, unless the owners or authorities having jurisdiction over the property agree to such acquisition. No governing body shall construct any structure of any type on or over any property which has been dedicated to public use, or which is at the time being so used, unless the owners or

authorities having jurisdiction over the property agree to the construction of such structure. A local government may use any right-of-way, easement or other similar property right necessary or convenient in connection with the acquisition, improvement, operation or maintenance of a public works project held by the state or any other local government; provided, that the state or such other local government consents to such use;

(11) Enter on any lands, waters and premises for the purpose of making surveys, soundings and examinations in or for the furtherance of any public works project;

(12) Make contracts and execute instruments containing such terms, provisions and conditions as in the discretion of the governing body may be necessary, proper or advisable for the purpose of obtaining a grant, loan or other financial assistance from the state or any state or federal agency pursuant to a state or federal aid act; make all other contracts and execute all other instruments necessary, proper or advisable in or for the furtherance of any public works project; and carry out and perform the terms and conditions of all such contracts or instruments;

(13) Accept from any state or federal agency grants for or in aid of the construction of any public works project;

(14) Subscribe to and comply with any state or federal aid act and any rules and regulations made by the state or any state or federal agency with regard to any grants or loans, or both;

(15) Exercise, for the purpose of obtaining a grant, loan or other financial assistance from the state or any state or federal agency pursuant to or by virtue of any state or federal aid act, any power conferred by this chapter independently or in conjunction with any other power or powers conferred by this chapter or heretofore or hereafter conferred by any other law;

(16) Lease all or any portion of off-street parking facilities for the purpose of parking motor vehicles to any person, firm or corporation, for operation by such person, firm or corporation, and fix and collect rentals therefor and make contracts for the operation and management thereof. All revenues derived from any such lease or contract shall be regarded as fees, rents, tolls or other charges for the use of, or in connection with, the facilities;

(17) Lease all or any portion of urban transit facilities to any person, firm, or corporation, for operation by such person, firm or corporation, and to fix and collect rentals therefor and make contracts for the operation and management thereof, notwithstanding the fact that the local government may or may not then operate its own urban transit facilities. All revenues derived from any such lease or contract shall be regarded as fees, rents, tolls or other charges for the use of, or in connection with, the respective facilities;

(18) Combine all or any parts of parking facilities into a single public works project. Nothing contained in this chapter shall in any way affect the validity of any private act now existing or which may hereafter be enacted, prohibiting any local government from engaging in the public parking business;

(19) Provide for the replacement of lost, destroyed or mutilated bonds or notes;

(20) Perform any powers or duties authorized under this chapter through, or by means of, its own officers, agents and employees, or by contract with private corporations, firms or individuals; and

(21) Do all things necessary or convenient to carry out the powers expressly given in this chapter. [Acts 1986, ch. 770, § 1-7; 1987, ch. 77, §§ 1, 2; 1990, ch. 683, § 1.]